ACCUENERGY

AcuCT A Series

Revenue Grade Split-Core Current Transformer



DATASHEET

AcuCT A Series

AcuCT-050A

Revenue Grade Split-Core
Current Transformer Datasheet



c UL us CE RoHS COMPLIANT

The AcuCT-050A is a premium, revenue grade split-core current transformer designed for high accuracy energy measurements and power monitoring applications. Multiple output options and 0.2% accuracy across all rated currents make it ideal for metering and billing verification. The user-friendly press-open design with a durable, compact form factor enables fast installation. An optional corrosion-resistant mounting accessory ensures a stable, secure connection even in the most demanding environments.

Features

- Revenue grade 0.2% accuracy from 5% - 120% of rated current.
- Multiple output options including 80mA, 100mA, 250mV, and 333mV on all rated currents.
- Optional 50 – 400 Hz version for aerospace, marine, and shipboard power systems with an accuracy of 0.2% across the full range.
- Press-open split-core design enables quick and simple installation.

ACCUENERGY

Specifications

RATED CURRENT	20A, 30A, 50A, 60A, 80A, 100A, 150A
Current Range	5% - 120% of Rated Current
Output	80mA, 100mA, 250mV, 333mV
Accuracy	0.2%
MECHANICAL/ENVIRONMENTAL	
Form Factor	Press Open Split-Core CT
Window Size	Ø 13.0 mm (0.51")
Exterior Dimensions	83 mm x 83 mm x 45 mm (3.27" x 3.27" x 1.77")
Case Material	UL 94V-0 Rated Flame Retardant
Lead Wires	2.5 m (8 ft), Twisted Pair, 16 / 18 AWG
Operating Temperature	-25°C to 70°C / -13°F to 158°F
Storage Temperature	-40°C to 80°C / -40°F to 176°F
Operating Humidity	Non-Condensing, 5% to 95% RH
Installation Conditions	Indoor Use
ELECTRICAL	
Wire Polarity	White=Positive, Black=Negative
Phase Orientation	H1 Points Towards Source
Frequency Range	50 / 60 Hz (Standard) 50 Hz – 400 Hz (400 Hz Models Only)
Burden	1.5 Ω – 2.5 Ω @ 80 mA, 100 mA Output
Rated Continuous Thermal Current	120% of Rated Current
Insulation Resistance	500 V / 100 MΩ min
SAFETY/COMPLIANCE	
Withstand Voltage	5.0 kV / 1 mA / 1 min
Rated Voltage	600VAC, Rated CAT IV, PD3
Certifications & Compliance	CE, RoHS, UL Listed UL2808, CSA C22.2, IEC 61010-1

Dimensions

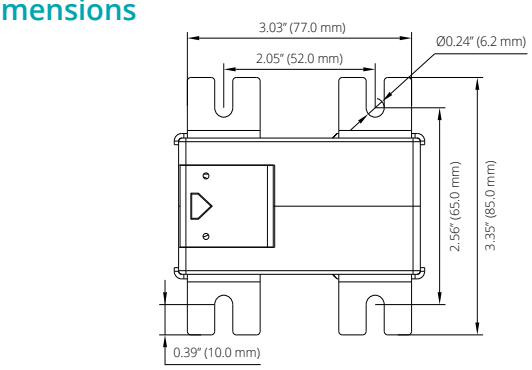

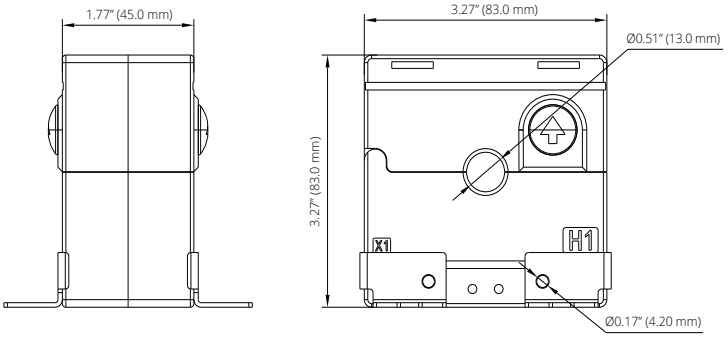

Typical Parameters

MODEL	CURRENT RATIO	FREQUENCY	ACCURACY	BURDEN / RESISTANCE	LEAD LENGTH
AcuCT-050A-20: 80mA	20 / 80 mA	50 / 60 Hz	0.2%	1.5 Ω	2.5 m
AcuCT-050A-30: 80mA	30 / 80 mA	50 / 60 Hz	0.2%	1.5 Ω	2.5 m
AcuCT-050A-50: 80mA	50 / 80 mA	50 / 60 Hz	0.2%	1.5 Ω	2.5 m
AcuCT-050A-60: 80mA	60 / 80 mA	50 / 60 Hz	0.2%	1.5 Ω	2.5 m
AcuCT-050A-80: 80mA	80 / 80 mA	50 / 60 Hz	0.2%	1.5 Ω	2.5 m
AcuCT-050A-100: 80mA	100 / 80 mA	50 / 60 Hz	0.2%	1.5 Ω	2.5 m
AcuCT-050A-150: 80mA	150 / 80 mA	50 / 60 Hz	0.2%	2.5 Ω	2.5 m
AcuCT-050A-20: 100mA	20 / 100 mA	50 / 60 Hz	0.2%	1.5 Ω	2.5 m
AcuCT-050A-30: 100mA	30 / 100 mA	50 / 60 Hz	0.2%	1.5 Ω	2.5 m
AcuCT-050A-50: 100mA	50 / 100 mA	50 / 60 Hz	0.2%	1.5 Ω	2.5 m
AcuCT-050A-60: 100mA	60 / 100 mA	50 / 60 Hz	0.2%	1.5 Ω	2.5 m
AcuCT-050A-80: 100mA	80 / 100 mA	50 / 60 Hz	0.2%	1.5 Ω	2.5 m
AcuCT-050A-100: 100mA	100 / 100 mA	50 / 60 Hz	0.2%	1.5 Ω	2.5 m
AcuCT-050A-150: 100mA	150 / 100 mA	50 / 60 Hz	0.2%	2.5 Ω	2.5 m
AcuCT-050A-20: 250mV	20 / 250 mV	50 / 60 Hz	0.2%		2.5 m
AcuCT-050A-30: 250mV	30 / 250 mV	50 / 60 Hz	0.2%		2.5 m
AcuCT-050A-50: 250mV	50 / 250 mV	50 / 60 Hz	0.2%		2.5 m
AcuCT-050A-60: 250mV	60 / 250 mV	50 / 60 Hz	0.2%		2.5 m
AcuCT-050A-80: 250mV	80 / 250 mV	50 / 60 Hz	0.2%		2.5 m
AcuCT-050A-100: 250mV	100 / 250 mV	50 / 60 Hz	0.2%		2.5 m
AcuCT-050A-150: 250mV	150 / 250 mV	50 / 60 Hz	0.2%		2.5 m
AcuCT-050A-20: 333mV	20 / 333 mV	50 / 60 Hz	0.2%		2.5 m
AcuCT-050A-30: 333mV	30 / 333 mV	50 / 60 Hz	0.2%		2.5 m
AcuCT-050A-50: 333mV	50 / 333 mV	50 / 60 Hz	0.2%		2.5 m
AcuCT-050A-60: 333mV	60 / 333 mV	50 / 60 Hz	0.2%		2.5 m
AcuCT-050A-80: 333mV	80 / 333 mV	50 / 60 Hz	0.2%		2.5 m
AcuCT-050A-100: 333mV	100 / 333 mV	50 / 60 Hz	0.2%		2.5 m
AcuCT-050A-150: 333mV	150 / 333 mV	50 / 60 Hz	0.2%		2.5 m

Mounting Accessory

Optional mounting kit is available which can be used to secure the device. Each kit includes 4 mounting brackets, 2 mounting screws (M4 x 55 mm), and 2 mounting nuts (M4 x 5 mm). The recommended tightening torque is 0.5 to 0.8 N·m.

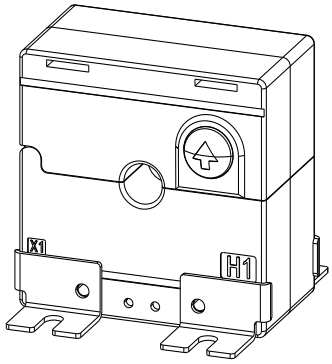

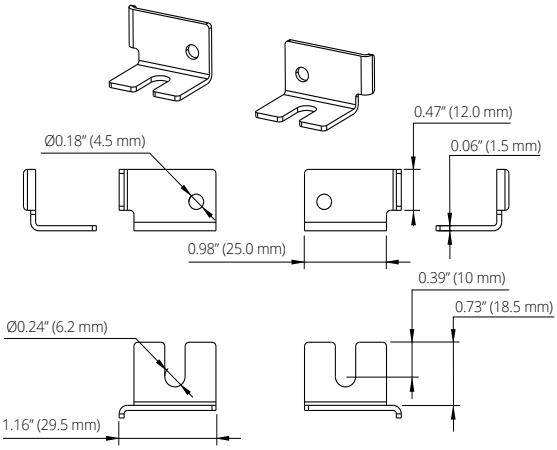

Installation Instructions

1. Press the buttons on both sides of the upper housing of CT to open it, so that the primary conductor cable can be passed through the current transformer window.

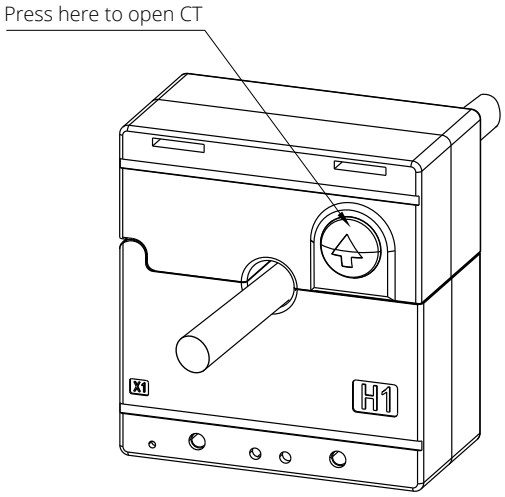

2. Insert the primary conductor cable through the window from H1 side, which must point towards the source. The white wire is the positive lead, and the black wire is the negative lead. This will ensure correct phase orientation during installation.

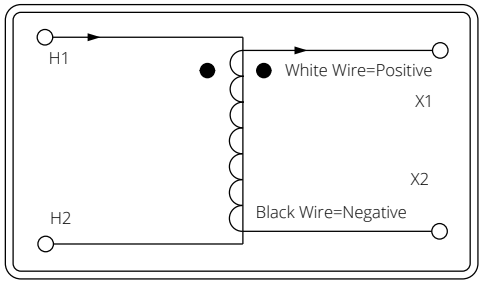

Ordering Information

	Model	-	*Rated Input*	:	*Rated Output*	-	*Frequency*
	AcuCT-050A		20: 20A		80mA		Blank: 50/60Hz
			30: 30A		100mA		400: 50-400Hz
			50: 50A		250mV		
			60: 60A		333mV		
			80: 80A				
			100: 100A				
			150: 150A				
Ordering Example	**AcuCT-050A**	**-**	**30**	**:**	**100 mA**		
	AcuCT-050A	**-**	**20**	**:**	**333 mV**	**-**	**400**

\+ **Accessory *(Optional)***

Model	*Accessory*
ACUBRAC	SP5
Ordering Example	**ACUBRAC - SP5**

Mod-Tronic Instruments Ltd.
Brampton, Ontario, Canada
Tel: 1-800-794-5883
Web: www.mod-tronic.com
Email: sales@mod-tronic.com

Revision Date: September 2026 Version: 1.0.1
Specs Subject To Change Without Notice.

AcuCT A Series

AcuCT-075A

Revenue Grade Split-Core
Current Transformer Datasheet



The AcuCT-075A is a premium, revenue grade split-core current transformer designed for high accuracy energy measurements and power monitoring applications. Multiple output options and 0.2% accuracy across all rated currents make it ideal for metering and billing verification. The user-friendly press-open design with a durable, compact form factor enables fast installation. Optional mounting accessory provides stable connection and corrosion resistance for safety and quality in challenging applications.

Features

- Revenue grade 0.2% accuracy from 5% – 120% of rated current, on all rated currents.
- Multiple output options including 80mA, 100mA, 250mV and 333mV on all rated currents.
- Optional 50 – 400 Hz version for aerospace, marine, and shipboard power systems with an accuracy of 0.2% across the full range.
- Press-open split-core design enables quick and simple installation.

Specifications

RATED CURRENT	50A, 75A, 80A, 100A, 125A, 150A, 200A, 250A
Current Range	5% - 120% of Rated Current
Output	80mA,100mA, 250mV, 333mV
Accuracy	0.2% IEC 61869-2 Class 0.2 for Select Models
MECHANICAL/ENVIRONMENTAL	
Form Factor	Press Open Split-Core CT
Window Size	19 mm x 19 mm (0.75" x 0.75")
Exterior Dimensions	77 mm x 85 mm x 32 mm (3.03" x 3.35" x 1.26")
Case Material	UL 94V-0 Rated Flame Retardant
Lead Wires	2.5 m (8 ft), Twisted Pair, 16 / 18 AWG
Operating Temperature	-25°C to 70°C / -13°F to 158°F
Storage Temperature	-40°C to 80°C / -40°F to 176°F
Operating Humidity	Non-Condensing, 5% to 95% RH
Installation Conditions	Indoor Use
ELECTRICAL	
Wire Polarity	White=Positive, Black=Negative
Phase Orientation	H1 Points Towards Source
Frequency Range	50 / 60 Hz (Standard) 50 Hz – 400 Hz (400 Hz Models Only)
Burden	1.5 Ω – 5 Ω @ 80 mA, 100 mA Output
Insulation Resistance	500 V / 100 MΩ min
Rated Continuous Thermal Current	120% of Rated Current
SAFETY/COMPLIANCE	
Withstand Voltage	5.0 kV / 1 mA / 1 min
Rated Voltage	600VAC, Rated CAT IV, PD3
Certifications & Compliance	CE, RoHS, UL Listed UL2808, CSA C22.2, IEC 61010-1, and IEC 61869-2

Dimensions

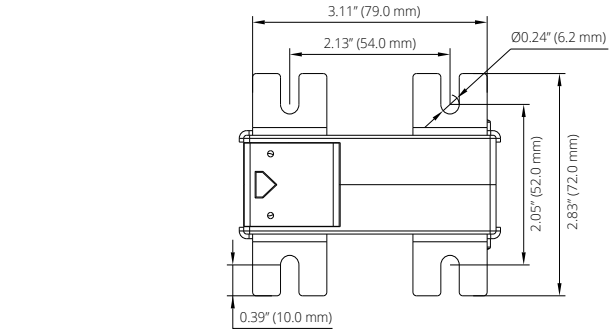

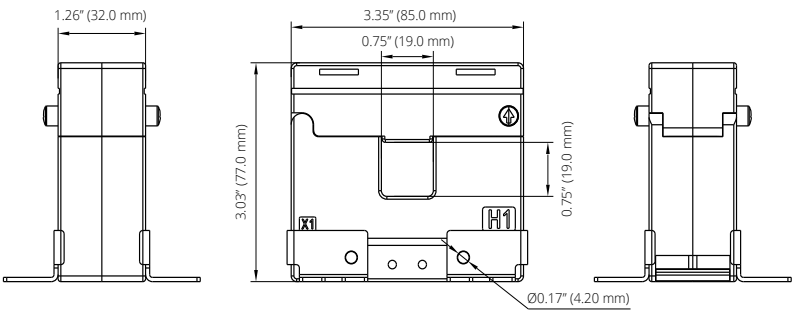

Typical Parameters

MODEL	CURRENT RATIO	FREQUENCY	ACCURACY	BURDEN / RESISTANCE	LEAD LENGTH
AcuCT-075A-50: 80mA	50 / 80 mA	50 / 60 Hz	0.2%	1.5 Ω	2.5 m
AcuCT-075A-75: 80mA	75 / 80 mA	50 / 60 Hz	0.2%	1.5 Ω	2.5 m
AcuCT-075A-80: 80mA	80 / 80 mA	50 / 60 Hz	0.2%	1.5 Ω	2.5 m
AcuCT-075A-100: 80mA	100 / 80 mA	50 / 60 Hz	0.2%	1.5 Ω	2.5 m
AcuCT-075A-125: 80mA	125 / 80 mA	50 / 60 Hz	0.2%	2.5 Ω	2.5 m
AcuCT-075A-150: 80mA	150 / 80 mA	50 / 60 Hz	0.2%	2.5 Ω	2.5 m
AcuCT-075A-200: 80mA	200 / 80 mA	50 / 60 Hz	IEC 61869-2 Class 0.2	2.5 Ω	2.5 m
AcuCT-075A-250: 80mA	250 / 80 mA	50 / 60 Hz	IEC 61869-2 Class 0.2	5 Ω	2.5 m
AcuCT-075A-50: 100mA	50 / 100 mA	50 / 60 Hz	0.2%	1.5 Ω	2.5 m
AcuCT-075A-75: 100mA	75 / 100 mA	50 / 60 Hz	0.2%	1.5 Ω	2.5 m
AcuCT-075A-80: 100mA	80 / 100 mA	50 / 60 Hz	0.2%	1.5 Ω	2.5 m
AcuCT-075A-100: 100mA	100 / 100 mA	50 / 60 Hz	0.2%	1.5 Ω	2.5 m
AcuCT-075A-125: 100mA	125 / 100 mA	50 / 60 Hz	0.2%	2.5 Ω	2.5 m
AcuCT-075A-150: 100mA	150 / 100 mA	50 / 60 Hz	0.2%	2.5 Ω	2.5 m
AcuCT-075A-200: 100mA	200 / 100 mA	50 / 60 Hz	IEC 61869-2 Class 0.2	2.5 Ω	2.5 m
AcuCT-075A-250: 100mA	250 / 100 mA	50 / 60 Hz	IEC 61869-2 Class 0.2	5 Ω	2.5 m
AcuCT-075A-50: 250mV	50 / 250 mV	50 / 60 Hz	0.2%		2.5 m
AcuCT-075A-75: 250mV	75 / 250 mV	50 / 60 Hz	0.2%		2.5 m
AcuCT-075A-80: 250mV	80 / 250 mV	50 / 60 Hz	0.2%		2.5 m
AcuCT-075A-100: 250mV	100 / 250 mV	50 / 60 Hz	0.2%		2.5 m
AcuCT-075A-125: 250mV	125 / 250 mV	50 / 60 Hz	0.2%		2.5 m
AcuCT-075A-150: 250mV	150 / 250 mV	50 / 60 Hz	0.2%		2.5 m
AcuCT-075A-200: 250mV	200 / 250 mV	50 / 60 Hz	IEC 61869-2 Class 0.2		2.5 m
AcuCT-075A-250: 250mV	250 / 250 mV	50 / 60 Hz	IEC 61869-2 Class 0.2		2.5 m
AcuCT-075A-50: 333mV	50 / 333 mV	50 / 60 Hz	0.2%		2.5 m
AcuCT-075A-75: 333mV	75 / 333 mV	50 / 60 Hz	0.2%		2.5 m
AcuCT-075A-80: 333mV	80 / 333 mV	50 / 60 Hz	0.2%		2.5 m
AcuCT-075A-100: 333mV	100 / 333 mV	50 / 60 Hz	0.2%		2.5 m
AcuCT-075A-125: 333mV	125 / 333 mV	50 / 60 Hz	0.2%		2.5 m
AcuCT-075A-150: 333mV	150 / 333 mV	50 / 60 Hz	0.2%		2.5 m
AcuCT-075A-200: 333mV	200 / 333 mV	50 / 60 Hz	IEC 61869-2 Class 0.2		2.5 m
AcuCT-075A-250: 333mV	250 / 333 mV	50 / 60 Hz	IEC 61869-2 Class 0.2		2.5 m

Mounting Accessory

Optional mounting kit is available which can be used to secure the device. Each kit includes 4 mounting brackets, 2 mounting screws (M4 x 40 mm), and 2 mounting nuts (M4 x 5 mm). Recommended tightening torque is 0.5 to 0.8 N·m.

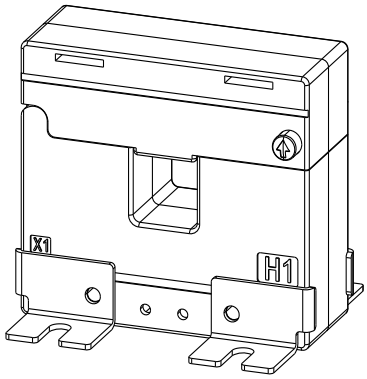

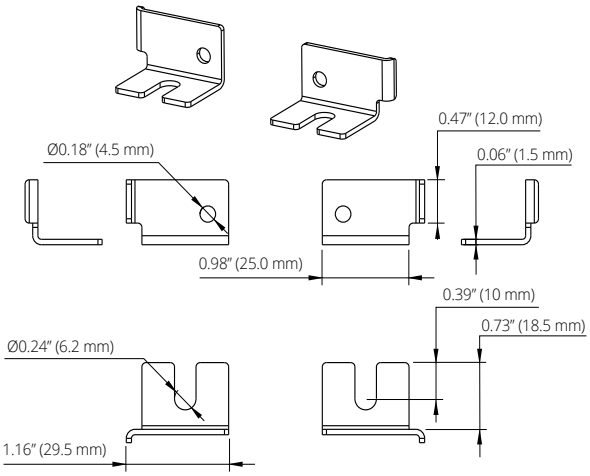

Installation Instructions

1. Press the buttons on both sides of the upper housing of CT to open it, so that the primary conductor cable can be passed through the current transformer window.

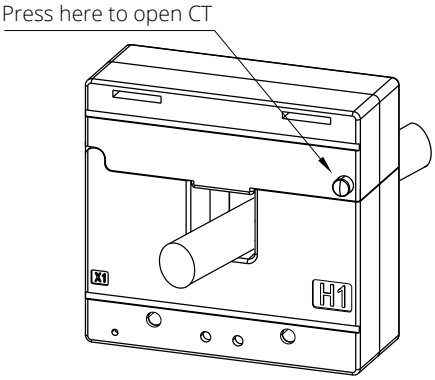

2. Insert the primary conductor cable through the window from H1 side, which must point towards the source. The white wire is the positive lead, and the black wire is the negative lead. This will ensure correct phase orientation during installation.

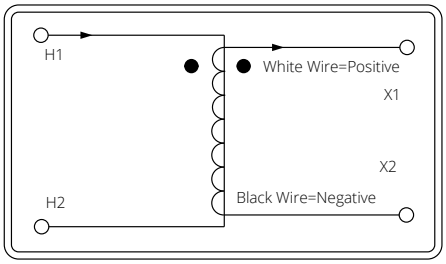

Ordering Information

	Model	-	Rated Input	:	Rated Output	-	Frequency
	AcuCT-075A		50: 50A		80mA		Blank: 50/60Hz
			75: 75A		100mA		400: 50-400Hz
			80: 80A		250mV		
			100: 100A		333mV		
			125: 125A				
			150: 150A				
			200: 200A				
			250: 250A				
Ordering Example	**AcuCT-075A**	**-**	**100**	**:**	**250mV**		
	AcuCT-075A	**-**	**50**	**:**	**100mA**	**-**	**400**

\+ **Accessory *(Optional)***

Model	*Accessory*
ACUBRAC	SP7
Ordering Example	**ACUBRAC - SP7**

Mod-Tronic Instruments Ltd.
Brampton, Ontario, Canada
Tel: 1-800-794-5883
Web: www.mod-tronic.com
Email: sales@mod-tronic.com

Revision Date: September 2026 Version: 1.0.2
Specs Subject To Change Without Notice.

AcuCT A Series

AcuCT-100A

Revenue Grade Split-Core
Current Transformer Datasheet



The AcuCT-100A is a premium, revenue-grade split-core current transformer designed for high-accuracy energy measurements and power monitoring applications. Multiple output options and 0.2% accuracy across all rated currents make it ideal for metering and billing verification. The user-friendly press-open design with a durable, compact form factor enables fast installation. Optional bolt mount or DIN rail mounting accessories are available to support secure installation in challenging applications.

Features

- Revenue grade 0.2% accuracy from 5% – 120% of rated current, on all rated currents.
- Multiple output options including 80mA,100mA, 250mV and 333mV on all rated currents.
- Optional 50 – 400 Hz version for aerospace, marine, and shipboard power systems with an accuracy of 0.2% across the full range.
- Optional 50 Hz – 2 kHz version for motor current signature analysis, available on the 100 A rating with 333 mV output.
- Press-open split-core design enables quick and simple installation.

Specifications

RATED CURRENT	100A, 125A, 150A, 200A, 250A
Current Range	5% - 120% of Rated Current
Output	80mA, 100mA, 250mV, 333mV
Accuracy	0.2% 0.5% for Extended Frequency Variant
MECHANICAL/ENVIRONMENTAL	
Form Factor	Press Open Split-Core CT
Window Size	25.5 mm x 32.0 mm (1.00" x 1.26")
Exterior Dimensions	79.5 mm x 81 mm x 28 mm (3.13" x 3.19" x 1.10")
Case Material	UL 94V-0 Rated Flame Retardant
Lead Wires	2.5 m (8 ft), Twisted Pair, 16 / 18 AWG
Operating Temperature	-25°C to 70°C / -13°F to 158°F
Storage Temperature	-40°C to 80°C / -40°F to 176°F
Operating Humidity	Non-Condensing, 5% to 95% RH
Installation Conditions	Indoor Use
ELECTRICAL	
Wire Polarity	White=Positive, Black=Negative
Phase Orientation	P1-K Points Towards Source
Frequency Range	50 / 60 Hz (Standard) 50 Hz – 400 Hz (400 Hz Models Only) 50 Hz – 2 kHz (2 kHz Models Only)
Burden	2.5 Ω – 5 Ω @ 80 mA, 100 mA Output
Insulation Resistance	500 V / 100 MΩ min
Rated Continuous Thermal Current	120% of Rated Current
SAFETY/COMPLIANCE	
Withstand Voltage	5.0 kV / 1 mA / 1 min
Rated Voltage	600VAC, Rated CAT IV, PD3
Certifications & Compliance	CE, RoHS, UL Listed UL2808, CSA C22.2, IEC 61010-1

Dimensions

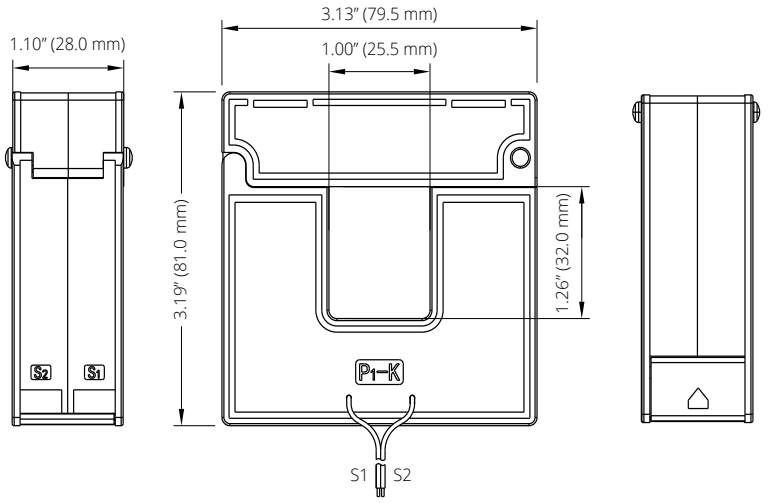

Typical Parameters

MODEL	CURRENT RATIO	FREQUENCY	ACCURACY	BURDEN / RESISTANCE	LEAD LENGTH
AcuCT-100A-100: 80mA	100 /80 mA	50 / 60 Hz	0.2%	2.5 Ω	2.5 m
AcuCT-100A-125: 80mA	125 / 80 mA	50 / 60 Hz	0.2%	2.5 Ω	2.5 m
AcuCT-100A-150: 80mA	150/ 80 mA	50 / 60 Hz	0.2%	2.5 Ω	2.5 m
AcuCT-100A-200: 80mA	200 / 80 mA	50 / 60 Hz	0.2%	2.5 Ω	2.5 m
AcuCT-100A-250: 80mA	250 / 80 mA	50 / 60 Hz	0.2%	5 Ω	2.5 m
AcuCT-100A-100: 100mA	100 / 100 mA	50 / 60 Hz	0.2%	2.5 Ω	2.5 m
AcuCT-100A-125: 100mA	125 / 100 mA	50 / 60 Hz	0.2%	2.5 Ω	2.5 m
AcuCT-100A-150: 100mA	150 / 100 mA	50 / 60 Hz	0.2%	2.5 Ω	2.5 m
AcuCT-100A-200: 100mA	200 / 100 mA	50 / 60 Hz	0.2%	2.5 Ω	2.5 m
AcuCT-100A-250: 100mA	250 / 100 mA	50 / 60 Hz	0.2%	5 Ω	2.5 m
AcuCT-100A-100: 250mV	100 / 250 mV	50 / 60 Hz	0.2%		2.5 m
AcuCT-100A-125: 250mV	125 / 250 mV	50 / 60 Hz	0.2%		2.5 m
AcuCT-100A-150: 250mV	150 / 250 mV	50 / 60 Hz	0.2%		2.5 m
AcuCT-100A-200: 250mV	200 / 250 mV	50 / 60 Hz	0.2%		2.5 m
AcuCT-100A-250: 250mV	250 / 250 mV	50 / 60 Hz	0.2%		2.5 m
AcuCT-100A-100: 333mV	100 / 333 mV	50 / 60 Hz	0.2%		2.5 m
AcuCT-100A-125: 333mV	125 / 333 mV	50 / 60 Hz	0.2%		2.5 m
AcuCT-100A-150: 333mV	150 / 333 mV	50 / 60 Hz	0.2%		2.5 m
AcuCT-100A-200: 333mV	200 / 333 mV	50 / 60 Hz	0.2%		2.5 m
AcuCT-100A-250: 333mV	250 / 333 mV	50 / 60 Hz	0.2%		2.5 m

Mounting Accessories

The optional ACUBRAC-SP9 mounting bracket includes both a bolt mounting kit and a DIN rail mounting kit.

1. Bolt Mounting Kit

Optional bolt mounting kit with M8 U-shaped slot is available for secure installation.

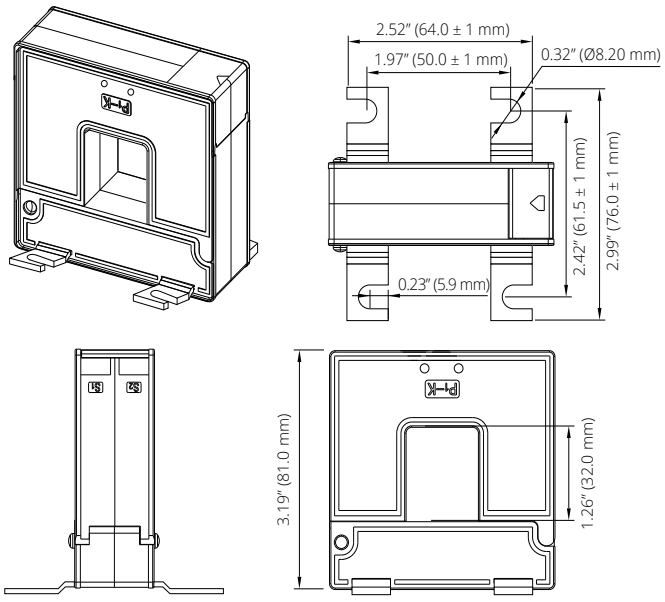

2. DIN Rail Mounting Kit

Compatible with standard 35mm DIN rail for convenient enclosure installation.

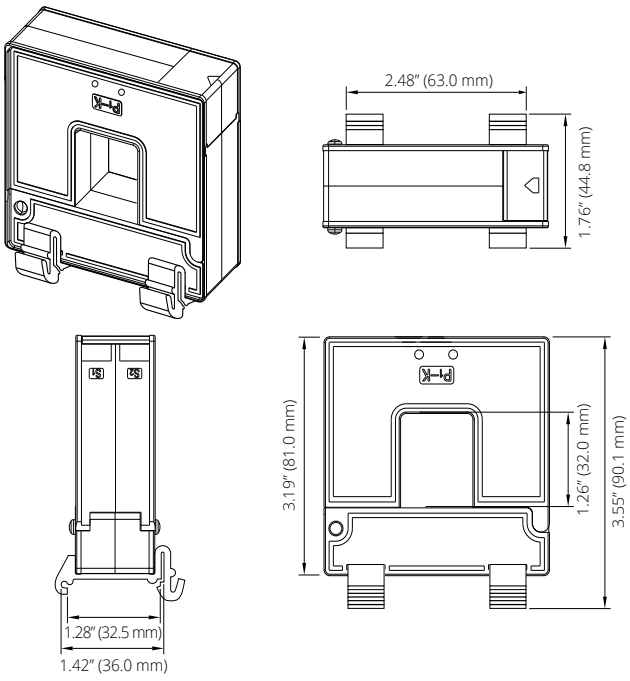

Installation Instructions

1. Press the buttons on both sides of the upper housing of CT to open it, so that the primary conductor cable can be passed through the current transformer window without disconnecting the cable.

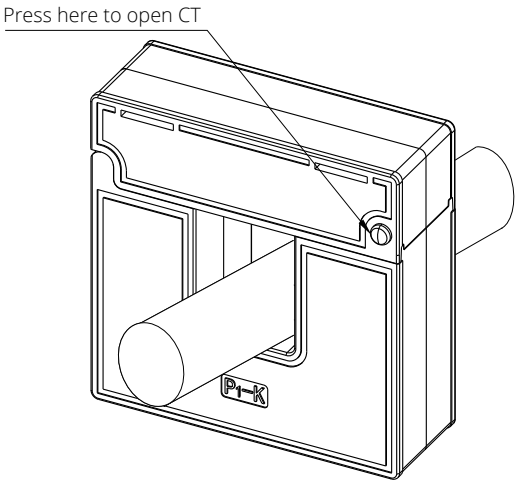

2. Insert the primary conductor cable through the window from P1-K side, which must point towards the source. The white wire is the positive lead, and the black wire is the negative lead. This will ensure correct phase orientation during installation.

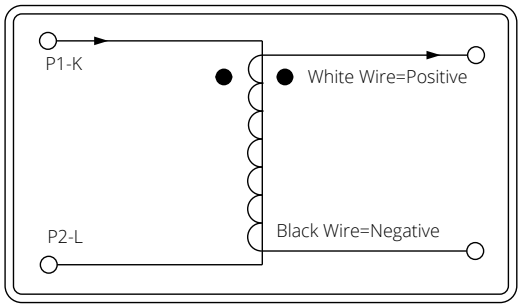

Ordering Information

	Model	-	*Rated Input*	:	*Rated Output*	-	*Frequency*
	AcuCT-100A		100: 100A		80mA		Blank: 50/60Hz
			125: 125A		100mA		400: 50-400Hz
			150: 150A		250mV		
			200: 200A		333mV		
			250: 250A				
Ordering Example	**AcuCT-100A**	**-**	**125**	**:**	**333mV**		
	AcuCT-100A	**-**	**100**	**:**	**100 mA**	**-**	**400**

Extended Frequency Variant

	Model	-	*Rated Input*	:	*Rated Output*	-	*Frequency*
	AcuCT-100A		100: 100A		333mV		2K: 50Hz – 2kHz
Ordering Example	**AcuCT-100A**	**-**	**125**	**:**	**333mV**	**-**	**2K**

+ **Accessory *(Optional)***

Model	*Accessory*
ACUBRAC	SP9
Ordering Example	**ACUBRAC - SP9**

Mod-Tronic Instruments Ltd.
Brampton, Ontario, Canada
Tel: 1-800-794-5883
Web: www.mod-tronic.com
Email: sales@mod-tronic.com

Revision Date: September 2026 Version: 1.0.1
Specs Subject To Change Without Notice.

AcuCT A Series

AcuCT-142A

Revenue Grade Split-Core
Current Transformer Datasheet

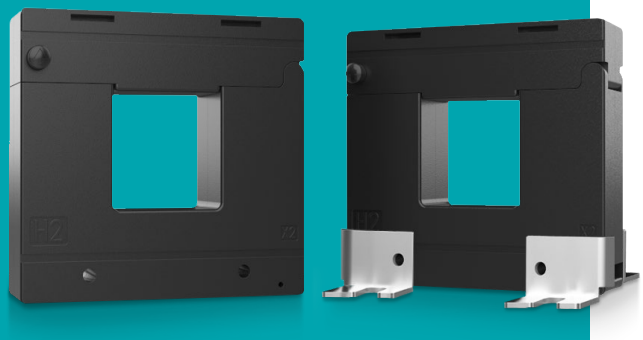

The AcuCT-142A is a premium, revenue grade split-core current transformer designed for high accuracy energy measurements and power monitoring applications. Multiple output options and 0.2% accuracy across all rated currents make it ideal for metering and billing verification. The user-friendly press-open design with a durable, compact form factor enables fast installation. An optional corrosion-resistant mounting accessory ensures a stable, secure connection even in the most demanding environments.

Features

- Revenue grade 0.2% accuracy from 5% – 120% of rated current, on all rated currents.
- Multiple output options including 80mA, 100mA, 250mV and 333mV on all rated currents.
- Optional 50 – 400 Hz version for aerospace, marine, and shipboard power systems with an accuracy of 0.2% across the full range.
- Optional 50 Hz – 2 kHz version for motor current signature Analysis, available on the 150 A rating with 333 mV output.
- Press-open split-core design enables quick and simple installation.

Specifications

RATED CURRENT	150A, 200A, 250A, 300A, 400A, 500A, 600A
Current Range	5% - 120% of Rated Current
Output	80mA, 100mA, 250mV, 333mV
Accuracy	0.2% IEC 61869-2 Class 0.2 for Select Models 0.5% for Extended Frequency Variant
MECHANICAL/ENVIRONMENTAL	
Form Factor	Press Open Split-Core CT
Window Size	36 mm x 36 mm (1.42" × 1.42")
Exterior Dimensions	89 mm x 96 mm x 32 mm (3.50" x 3.78" x 1.26")
Case Material	UL 94V-0 Rated Flame Retardant
Lead Wires	2.5 m (8 ft), Twisted Pair, 16 / 18 AWG
Operating Temperature	-25°C to 70°C / -13°F to 158°F
Storage Temperature	-40°C to 80°C / -40°F to 176°F
Operating Humidity	Non-Condensing, 5% to 95% RH
Installation Conditions	Indoor Use
ELECTRICAL	
Wire Polarity	White=Positive, Black=Negative
Phase Orientation	H1 Points Towards Source
Frequency Range	50 / 60 Hz (Standard) 50 Hz – 400 Hz (400 Hz Models Only) 50 Hz – 2 kHz (2 kHz Model Only)
Burden	2.5 Ω – 10 Ω @ 80 mA, 100 mA Output
Insulation Resistance	500 V / 100 MΩ min
Rated Continuous Thermal Current	120% of Rated Current
SAFETY/COMPLIANCE	
Withstand Voltage	5.0 kV / 1 mA / 1 min
Rated Voltage	600VAC, Rated CAT IV, PD3
Certifications & Compliance	CE, RoHS, UL Listed UL2808, CSA C22.2, IEC 61010-1, and IEC 61869-2

Dimensions

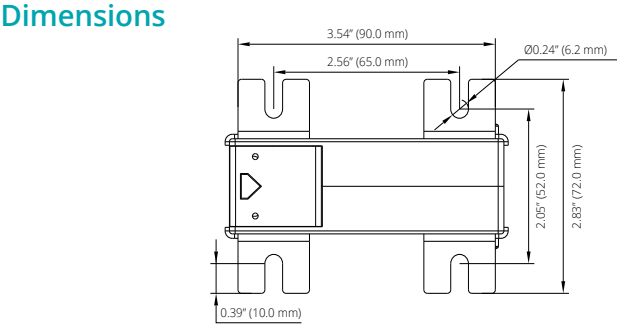

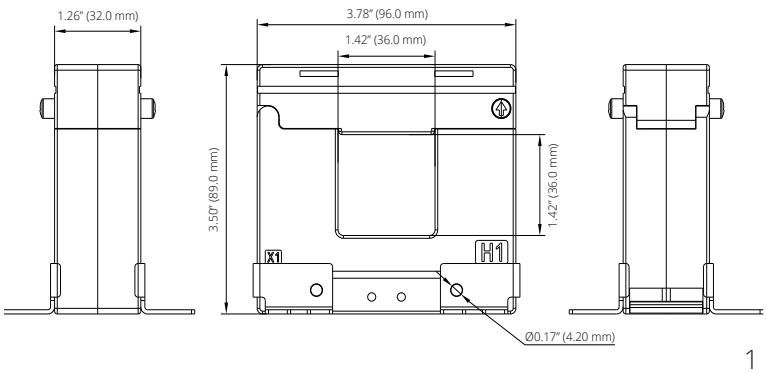

Typical Parameters

MODEL	CURRENT RATIO	FREQUENCY	ACCURACY	BURDEN / RESISTANCE	LEAD LENGTH
AcuCT-142A-200: 80mA	200 / 80 mA	50 / 60 Hz	0.2%	2.5 Ω	2.5 m
AcuCT-142A-250: 80mA	250 / 80 mA	50 / 60 Hz	0.2%	5 Ω	2.5 m
AcuCT-142A-300: 80mA	300 / 80 mA	50 / 60 Hz	0.2%	10 Ω	2.5 m
AcuCT-142A-400: 80mA	400 / 80 mA	50 / 60 Hz	IEC 61869-2 Class 0.2	10 Ω	2.5 m
AcuCT-142A-500: 80mA	500 / 80 mA	50 / 60 Hz	IEC 61869-2 Class 0.2	10 Ω	2.5 m
AcuCT-142A-600: 80mA	600 / 80 mA	50 / 60 Hz	IEC 61869-2 Class 0.2	10 Ω	2.5 m
AcuCT-142A-200: 100mA	200 / 100 mA	50 / 60 Hz	0.2%	2.5 Ω	2.5 m
AcuCT-142A-250: 100mA	250 / 100 mA	50 / 60 Hz	0.2%	5 Ω	2.5 m
AcuCT-142A-300: 100mA	300 / 100 mA	50 / 60 Hz	0.2%	10 Ω	2.5 m
AcuCT-142A-400: 100mA	400 / 100 mA	50 / 60 Hz	IEC 61869-2 Class 0.2	10 Ω	2.5 m
AcuCT-142A-500: 100mA	500 / 100 mA	50 / 60 Hz	IEC 61869-2 Class 0.2	10 Ω	2.5 m
AcuCT-142A-600: 100mA	600 / 100 mA	50 / 60 Hz	IEC 61869-2 Class 0.2	10 Ω	2.5 m
AcuCT-142A-200: 250mV	200 / 250 mV	50 / 60 Hz	0.2%		2.5 m
AcuCT-142A-250: 250mV	250 / 250 mV	50 / 60 Hz	IEC 61869-2 Class 0.2		2.5 m
AcuCT-142A-300: 250mV	300 / 250 mV	50 / 60 Hz	IEC 61869-2 Class 0.2		2.5 m
AcuCT-142A-400: 250mV	400 /250 mV	50 / 60 Hz	IEC 61869-2 Class 0.2		2.5 m
AcuCT-142A-500: 250mV	500 /250 mV	50 / 60 Hz	IEC 61869-2 Class 0.2		2.5 m
AcuCT-142A-600: 250mV	600 / 250 mV	50 / 60 Hz	IEC 61869-2 Class 0.2		2.5 m
AcuCT-142A-200: 333mV	200 / 333 mV	50 / 60 Hz	0.2%		2.5 m
AcuCT-142A-250: 333mV	250 / 333 mV	50 / 60 Hz	IEC 61869-2 Class 0.2		2.5 m
AcuCT-142A-300: 333mV	300 / 333mV	50 / 60 Hz	IEC 61869-2 Class 0.2		2.5 m
AcuCT-142A-400: 333mV	400 / 333 mV	50 / 60 Hz	IEC 61869-2 Class 0.2		2.5 m
AcuCT-142A-500: 333mV	500 / 333mV	50 / 60 Hz	IEC 61869-2 Class 0.2		2.5 m
AcuCT-142A-600: 333mV	600 / 333mV	50 / 60 Hz	IEC 61869-2 Class 0.2		2.5 m

Mounting Accessory

Optional mounting kit is available which can be used to secure the device. Each kit includes 4 mounting brackets, 2 mounting screws (M4 x 40 mm), and 2 mounting nuts (M4 × 5 mm). Recommended tightening torque is 0.5 to 0.8 N·m.

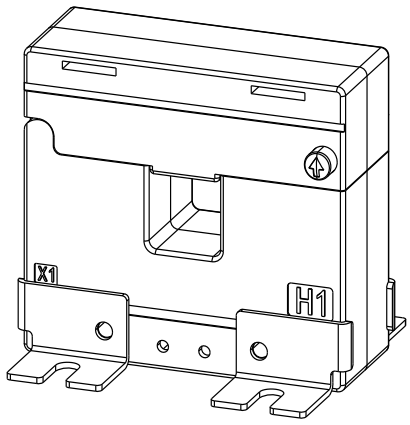

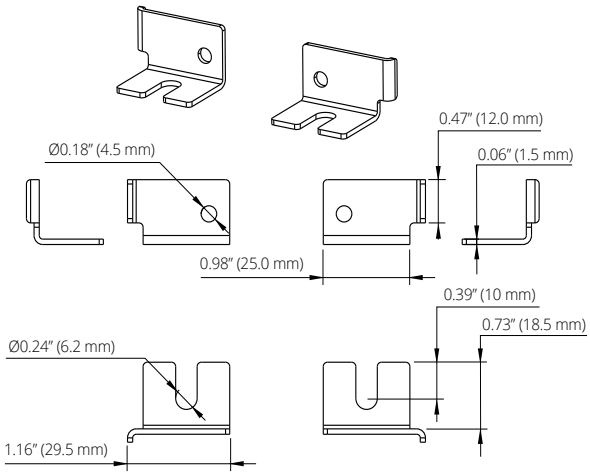

Installation Instructions

1. Press the buttons on both sides of the upper housing of CT to open it, so that the primary conductor cable can be passed through the current transformer window.

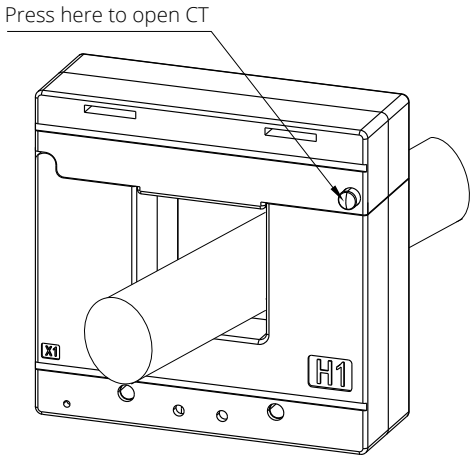

2. Insert the primary conductor cable through the window from H1 side, which must point towards the source. The white wire is the positive lead, and the black wire is the negative lead. This will ensure correct phase orientation during installation.

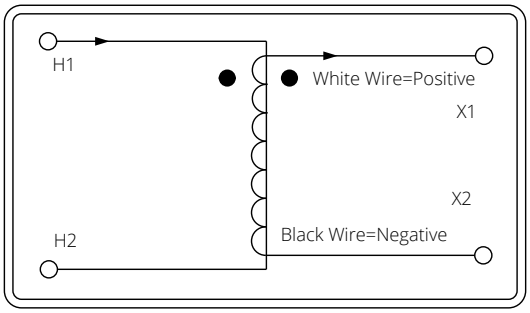

Ordering Information

	Model	-	*Rated Input*	:	*Rated Output*	-	*Frequency*
	AcuCT-142A		200: 200A		80mA		Blank: 50/60Hz
			250: 250A		100mA		400: 50-400Hz
			300: 300A		250mV		
			400: 400A		333mV		
			500: 500A				
			600: 600A				
Ordering Example	**AcuCT-142A**	**-**	**600**	**:**	**80mA**		
	AcuCT-142A	**-**	**200**	**:**	**100mA**	**-**	**400**

Extended Frequency Variant

	Model	-	*Rated Input*	:	*Rated Output*	-	*Frequency*
	AcuCT-142A		150: 150A		333mV		2K: 50Hz – 2kHz
Ordering Example	**AcuCT-142A**	**-**	**150**	**:**	**333mV**	**-**	**2K**

+ **Accessory *(Optional)***

Model	*Accessory*
ACUBRAC	SP7
Ordering Example	**ACUBRAC - SP7**

Mod-Tronic Instruments Ltd.
Brampton, Ontario, Canada
Tel: 1-800-794-5883
Web: www.mod-tronic.com
Email: sales@mod-tronic.com

Revision Date: September 2026 Version: 1.0.1
Specs Subject To Change Without Notice.

AcuCT A Series

AcuCT-200A

Revenue Grade Split-Core
Current Transformer Datasheet

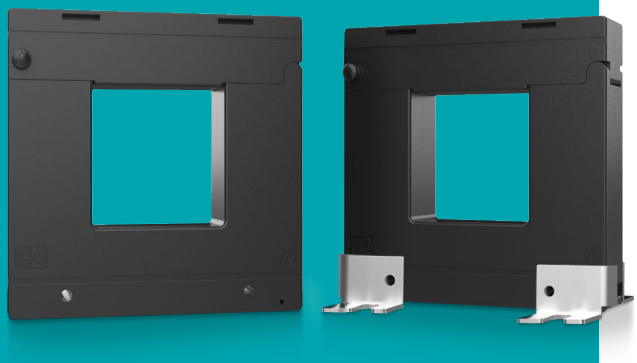

The AcuCT-200A is a premium, revenue grade split-core current transformer designed for high accuracy energy measurements and power monitoring applications. With multiple output options and IEC 61869-2 Class 0.2 compliance across selected ratios, it is ideal for metering and billing verification. The user-friendly press-open design with a durable, compact form factor enables fast installation. An optional corrosion-resistant mounting accessory ensures a stable, secure connection even in the most demanding environments.

Features

- IEC 61869-2 Class 0.2 compliance on selected ratios, with revenue grade 0.2% accuracy across all rated currents and outputs.
- Multiple output options including 80mA, 100mA, 250mV and 333mV.
- Optional 50 – 400 Hz version for aerospace, marine, and shipboard power systems with an accuracy of 0.2% across the full range.
- Optional 50 Hz – 2 kHz version for motor current signature analysis, available on the 200 A rating with 333 mV output.
- Press-open split-core design enables quick and simple installation.

Specifications

RATED CURRENT	200A, 400A, 500A, 600A, 750A, 800A, 1000A, 1200A, 1500A
Current Range	5% - 120% of Rated Current
Output	80mA, 100mA, 250mV, 333mV
Accuracy	0.2% IEC 61869-2 Class 0.2 for Select Models 0.5% for Extended Frequency Variant
MECHANICAL/ENVIRONMENTAL	
Form Factor	Press Open Split-Core CT
Window Size	51 mm x 51 mm (2.01" × 2.01")
Exterior Dimensions	111 mm x 115 mm x 32 mm (4.37" × 4.53" × 1.26")
Case Material	UL 94V-0 Rated Flame Retardant
Lead Wires	2.5 m (8 ft), Twisted Pair, 16 / 18 AWG
Operating Temperature	-25°C to 70°C / -13°F to 158°F
Storage Temperature	-40°C to 80°C / -40°F to 176°F
Operating Humidity	Non-Condensing, 5% to 95% RH
Installation Conditions	Indoor Use
ELECTRICAL	
Wire Polarity	White=Positive, Black=Negative
Phase Orientation	H1 Points Towards Source
Frequency Range	50 / 60 Hz (Standard) 50 Hz – 400 Hz (400 Hz Models Only) 50 Hz – 2 kHz (2 kHz Model Only)
Burden	10 Ω @ 80 mA, 100 mA Output
Insulation Resistance	500V / 100 MΩ min
Rated Continuous Thermal Current	120% of Rated Current
SAFETY/COMPLIANCE	
Withstand Voltage	5.0 kV / 1 mA / 1 min
Rated Voltage	600VAC, Rated CAT IV, PD3
Certifications & Compliance	CE, RoHS, UL Listed UL2808, CSA C22.2, IEC 61010-1, and IEC 61869-2

Dimensions

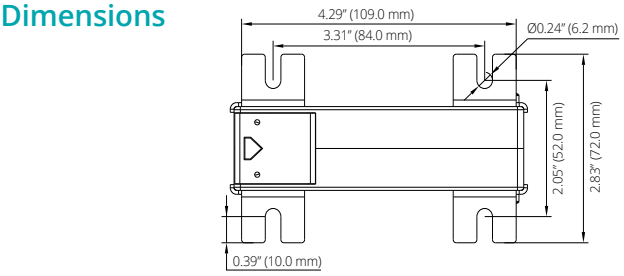

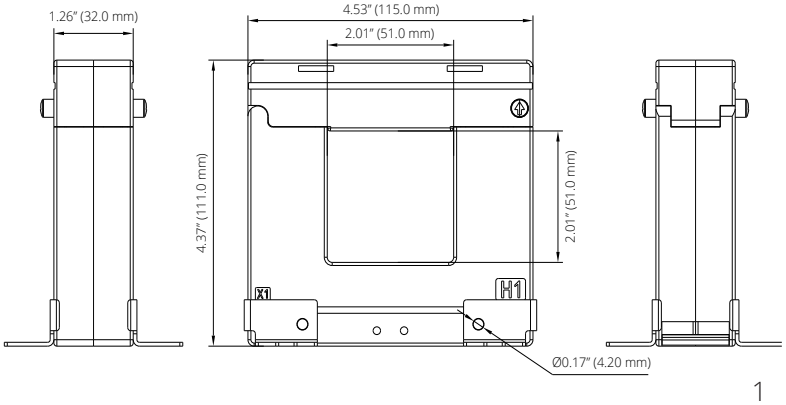

Typical Parameters

MODEL	CURRENT RATIO	FREQUENCY	ACCURACY	BURDEN / RESISTANCE	LEAD LENGTH
AcuCT-200A-400: 80mA	400 / 80 mA	50 / 60 Hz	0.2%	10 Ω	2.5 m
AcuCT-200A-500: 80mA	500 / 80 mA	50 / 60 Hz	0.2%	10 Ω	2.5 m
AcuCT-200A-600: 80mA	600 / 80 mA	50 / 60 Hz	IEC 61869-2 Class 0.2	10 Ω	2.5 m
AcuCT-200A-750: 80mA	750 / 80 mA	50 / 60 Hz	IEC 61869-2 Class 0.2	10 Ω	2.5 m
AcuCT-200A-800: 80mA	800 / 80 mA	50 / 60 Hz	IEC 61869-2 Class 0.2	10 Ω	2.5 m
AcuCT-200A-1000: 80mA	1000 / 80 mA	50 / 60 Hz	IEC 61869-2 Class 0.2	10 Ω	2.5 m
AcuCT-200A-1200: 80mA	1200 / 80 mA	50 / 60 Hz	IEC 61869-2 Class 0.2	10 Ω	2.5 m
AcuCT-200A-1500: 80mA	1500 / 80 mA	50 / 60 Hz	IEC 61869-2 Class 0.2	10 Ω	2.5 m
AcuCT-200A-400: 100mA	400 / 100 mA	50 / 60 Hz	0.2%	10 Ω	2.5 m
AcuCT-200A-500: 100mA	500 / 100 mA	50 / 60 Hz	0.2%	10 Ω	2.5 m
AcuCT-200A-600: 100mA	600 / 100 mA	50 / 60 Hz	IEC 61869-2 Class 0.2	10 Ω	2.5 m
AcuCT-200A-750: 100mA	750 / 100 mA	50 / 60 Hz	IEC 61869-2 Class 0.2	10 Ω	2.5 m
AcuCT-200A-800: 100mA	800 / 100 mA	50 / 60 Hz	IEC 61869-2 Class 0.2	10 Ω	2.5 m
AcuCT-200A-1000: 100mA	1000 / 100 mA	50 / 60 Hz	IEC 61869-2 Class 0.2	10 Ω	2.5 m
AcuCT-200A-1200: 100mA	1200 / 100 mA	50 / 60 Hz	IEC 61869-2 Class 0.2	10 Ω	2.5 m
AcuCT-200A-1500: 100mA	1500 / 100mA	50 / 60 Hz	IEC 61869-2 Class 0.2	10 Ω	2.5 m
AcuCT-200A-400: 250mV	400 / 250 mV	50 / 60 Hz	0.2%		2.5 m
AcuCT-200A-500: 250mV	500 / 250 mV	50 / 60 Hz	0.2%		2.5 m
AcuCT-200A-600: 250mV	600 / 250 mV	50 / 60 Hz	IEC 61869-2 Class 0.2		2.5 m
AcuCT-200A-750: 250mV	750 / 250 mV	50 / 60 Hz	IEC 61869-2 Class 0.2		2.5 m
AcuCT-200A-800: 250mV	800 / 250 mV	50 / 60 Hz	IEC 61869-2 Class 0.2		2.5 m
AcuCT-200A-1000: 250mV	1000 / 250 mV	50 / 60 Hz	IEC 61869-2 Class 0.2		2.5 m
AcuCT-200A-1200: 250mV	1200 / 250 mV	50 / 60 Hz	IEC 61869-2 Class 0.2		2.5 m
AcuCT-200A-1500: 250mV	1500 / 250 mV	50 / 60 Hz	IEC 61869-2 Class 0.2		2.5 m
AcuCT-200A-400: 333mV	400 / 333 mV	50 / 60 Hz	0.2%		2.5 m
AcuCT-200A-500: 333mV	500 / 333 mV	50 / 60 Hz	0.2%		2.5 m
AcuCT-200A-600: 333mV	600 / 333 mV	50 / 60 Hz	IEC 61869-2 Class 0.2		2.5 m
AcuCT-200A-750: 333mV	750 / 333 mV	50 / 60 Hz	IEC 61869-2 Class 0.2		2.5 m
AcuCT-200A-800: 333mV	800 / 333 mV	50 / 60 Hz	IEC 61869-2 Class 0.2		2.5 m
AcuCT-200A-1000: 333mV	1000 / 333 mV	50 / 60 Hz	IEC 61869-2 Class 0.2		2.5 m
AcuCT-200A-1200: 333mV	1200 / 333 mV	50 / 60 Hz	IEC 61869-2 Class 0.2		2.5 m
AcuCT-200A-1500: 333mV	1500 / 333 mV	50 / 60 Hz	IEC 61869-2 Class 0.2		2.5 m

Mounting Accessory

Optional mounting kit is available which can be used to secure the device. Each kit includes 4 mounting brackets, 2 mounting screws (M4 x 40 mm), and 2 mounting nuts (M4 x 5 mm). Recommended tightening torque is 0.5 to 0.8 N·m.

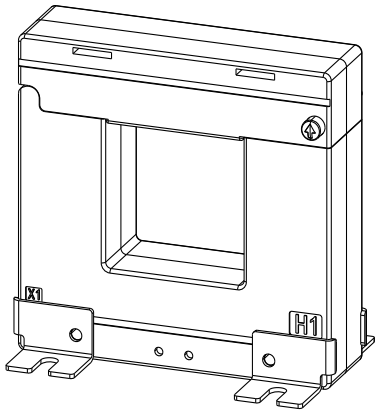

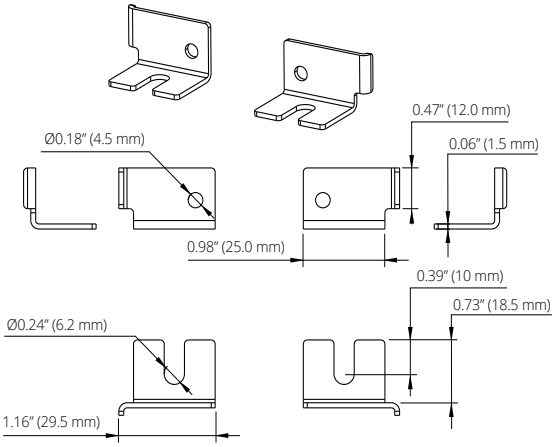

Installation Instructions

1. Press the buttons on both sides of the upper housing of CT to open it, so that the primary conductor cable can be passed through the current transformer window.

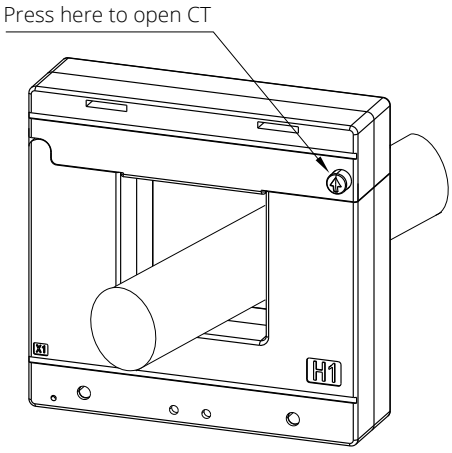

2. Insert the primary conductor cable through the window from H1 side, which must point towards the source. The white wire is the positive lead, and the black wire is the negative lead. This will ensure correct phase orientation during installation.

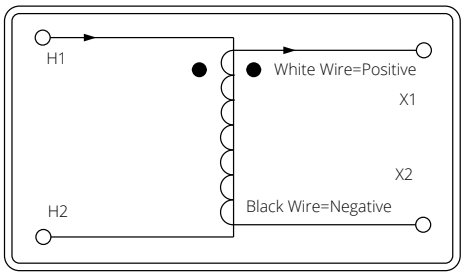

Ordering Information

	Model	-	Rated Input	:	Rated Output	-	Frequency
	AcuCT-200A		400: 400A		80mA		Blank: 50/60Hz
			500: 500A		100mA		400: 50-400Hz
			600: 600A		250mV		
			750: 750A		333mV		
			800: 800A				
			1000: 1000A				
			1200: 1200A				
			1500: 1500A				
Ordering Example	**AcuCT-200A**	**-**	**500**	**:**	**80mA**		
	AcuCT-200A	**-**	**400**	**:**	**100mA**	**-**	**400**

Extended Frequency Variant

	Model	-	Rated Input	:	Rated Output	-	Frequency
	AcuCT-200A		200: 200A		333mV		2K: 50Hz – 2kHz
Ordering Example	**AcuCT-200A**	**-**	**200**	**:**	**333mV**	**-**	**2K**

+ **Accessory *(Optional)***

Model	*Accessory*
ACUBRAC	SP7
Ordering Example	**ACUBRAC - SP7**

Mod-Tronic Instruments Ltd.
Brampton, Ontario, Canada
Tel: 1-800-794-5883
Web: www.mod-tronic.com
Email: sales@mod-tronic.com

Revision Date: September 2026 Version: 1.0.1
Specs Subject To Change Without Notice.

AcuCT A Series

AcuCT-3337A

Revenue Grade Split-Core
Current Transformer Datasheet



The AcuCT-3337A is a premium, revenue grade split-core current transformer designed for high accuracy energy measurements and power monitoring applications. Multiple output options and IEC 61869-2 Class 0.2 compliance across select ratios, it is ideal for metering and billing verification. The user-friendly press-open design with a durable, compact form factor enables fast installation. An inclusive corrosion-resistant mounting accessory ensures a stable, secure connection even in the most demanding environments.

Features

- IEC 61869-2 Class 0.2 compliance on most ratios, with revenue grade 0.2% accuracy across all rated currents and outputs.
- Multiple output options including 80mA, 100mA, 250mV, and 333mV.
- Optional 50 – 400 Hz version for aerospace, marine, and shipboard power systems with an accuracy of 0.2% across the full range.
- Press-open split-core design enables quick and simple installation.

Specifications

RATED CURRENT	600A, 750A, 800A, 1000A, 1200A, 1250A, 1500A, 2000A
Current Range	5% - 120% of Rated Current
Output	80mA, 100mA, 250mV, 333mV
Accuracy	0.2% IEC 61869-2 Class 0.2 for Select Models
MECHANICAL/ENVIRONMENTAL	
Form Factor	Press Open Split-Core CT
Window Size	85 mm x 95 mm (3.35" × 3.74")
Exterior Dimensions	160 mm x 151 mm x 32 mm (6.30" x 5.94" x 1.26")
Case Material	UL 94V-0 Rated Flame Retardant
Lead Wires	2.5 m (8 ft), Twisted Pair, 16 / 18 AWG
Operating Temperature	-25°C to 70°C / -13°F to 158°F
Storage Temperature	-40°C to 80°C / -40°F to 176°F
Operating Humidity	Non-Condensing, 5% to 95% RH
Installation Conditions	Indoor Use
ELECTRICAL	
Wire Polarity	White=Positive, Black=Negative
Phase Orientation	H1 Points Towards Source
Frequency Range	50 / 60 Hz (Standard) 50 Hz – 400 Hz (400 Hz Models Only)
Burden	10 Ω @ 80 mA, 100 mA Output
Insulation Resistance	500 V / 100 MΩ min
Rated Continuous Thermal Current	120% of Rated Current
SAFETY/COMPLIANCE	
Withstand Voltage	5.0 kV / 1 mA / 1 min
Rated Voltage	600VAC, Rated CAT IV, PD3
Certifications & Compliance	CE, RoHS, UL Listed UL2808, CSA C22.2, IEC 61010-1, and IEC 61869-2

Dimensions

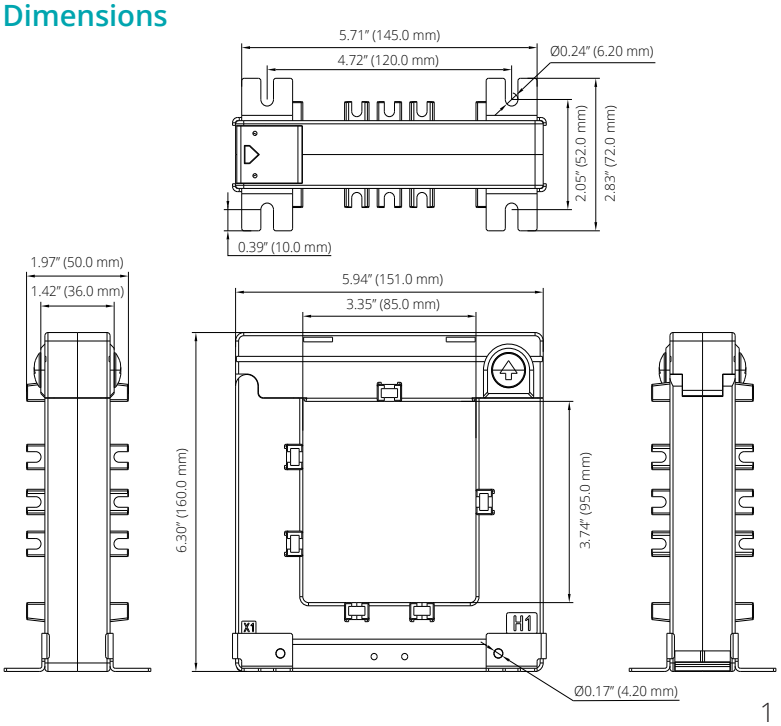

Typical Parameters

MODEL	CURRENT RATIO	FREQUENCY	ACCURACY	BURDEN / RESISTANCE	LEAD LENGTH
AcuCT-3337A-600: 80mA	600 / 80 mA	50 / 60 Hz	0.2%	10 Ω	2.5 m
AcuCT-3337A-750: 80mA	750 / 80 mA	50 / 60 Hz	0.2%	10 Ω	2.5 m
AcuCT-3337A-800: 80mA	800 / 80 mA	50 / 60 Hz	IEC 61869-2 Class 0.2	10 Ω	2.5 m
AcuCT-3337A-1000: 80mA	1000 / 80 mA	50 / 60 Hz	IEC 61869-2 Class 0.2	10 Ω	2.5 m
AcuCT-3337A-1200: 80mA	1200 / 80 mA	50 / 60 Hz	IEC 61869-2 Class 0.2	10 Ω	2.5 m
AcuCT-3337A-1250: 80mA	1250 / 80 mA	50 / 60 Hz	IEC 61869-2 Class 0.2	10 Ω	2.5 m
AcuCT-3337A-1500: 80mA	1500 / 80 mA	50 / 60 Hz	IEC 61869-2 Class 0.2	10 Ω	2.5 m
AcuCT-3337A-2000: 80mA	2000 / 80 mA	50 / 60 Hz	IEC 61869-2 Class 0.2	10 Ω	2.5 m
AcuCT-3337A-600: 100mA	600 / 100 mA	50 / 60 Hz	0.2%	10 Ω	2.5 m
AcuCT-3337A-750: 100mA	750 / 100 mA	50 / 60 Hz	0.2%	10 Ω	2.5 m
AcuCT-3337A-800: 100mA	800 / 100 mA	50 / 60 Hz	IEC 61869-2 Class 0.2	10 Ω	2.5 m
AcuCT-3337A-1000: 100mA	1000 / 100 mA	50 / 60 Hz	IEC 61869-2 Class 0.2	10 Ω	2.5 m
AcuCT-3337A-1200: 100mA	1200 / 100 mA	50 / 60 Hz	IEC 61869-2 Class 0.2	10 Ω	2.5 m
AcuCT-3337A-1250: 100mA	1250 / 100 mA	50 / 60 Hz	IEC 61869-2 Class 0.2	10 Ω	2.5 m
AcuCT-3337A-1500: 100mA	1500 / 100 mA	50 / 60 Hz	IEC 61869-2 Class 0.2	10 Ω	2.5 m
AcuCT-3337A-2000: 100mA	2000 / 100 mA	50 / 60 Hz	IEC 61869-2 Class 0.2	10 Ω	2.5 m
AcuCT-3337A-600: 250mV	600 / 250 mV	50 / 60 Hz	0.2%		2.5 m
AcuCT-3337A-750: 250mV	750 / 250 mV	50 / 60 Hz	0.2%		2.5 m
AcuCT-3337A-800: 250mV	800 / 250 mV	50 / 60 Hz	IEC 61869-2 Class 0.2		2.5 m
AcuCT-3337A-1000: 250mV	1000 / 250 mV	50 / 60 Hz	IEC 61869-2 Class 0.2		2.5 m
AcuCT-3337A-1200: 250mV	1200 / 250 mV	50 / 60 Hz	IEC 61869-2 Class 0.2		2.5 m
AcuCT-3337A-1250: 250mV	1250 / 250 mV	50 / 60 Hz	IEC 61869-2 Class 0.2		2.5 m
AcuCT-3337A-1500: 250mV	1500 / 250 mV	50 / 60 Hz	IEC 61869-2 Class 0.2		2.5 m
AcuCT-3337A-2000: 250mV	2000 / 250 mV	50 / 60 Hz	IEC 61869-2 Class 0.2		2.5 m
AcuCT-3337A-600: 333mV	600 / 333 mV	50 / 60 Hz	0.2%		2.5 m
AcuCT-3337A-750: 333mV	750 / 333 mV	50 / 60 Hz	0.2%		2.5 m
AcuCT-3337A-800: 333mV	800 / 333 mV	50 / 60 Hz	IEC 61869-2 Class 0.2		2.5 m
AcuCT-3337A-1000: 333mV	1000 / 333 mV	50 / 60 Hz	IEC 61869-2 Class 0.2		2.5 m
AcuCT-3337A-1200: 333mV	1200 / 333 mV	50 / 60 Hz	IEC 61869-2 Class 0.2		2.5 m
AcuCT-3337A-1250: 333mV	1250 / 333 mV	50 / 60 Hz	IEC 61869-2 Class 0.2		2.5 m
AcuCT-3337A-1500: 333mV	1500 / 333 mV	50 / 60 Hz	IEC 61869-2 Class 0.2		2.5 m
AcuCT-3337A-2000: 333mV	2000 / 333 mV	50 / 60 Hz	IEC 61869-2 Class 0.2		2.5 m

Mounting Accessory

A mounting kit is included with the CT for stable and reliable installation. Each kit includes 4 mounting brackets, 2 mounting screws (M4 x 45 mm), and 2 mounting nuts (M4 x 5 mm). Recommended tightening torque is 0.5 to 0.8 N·m.

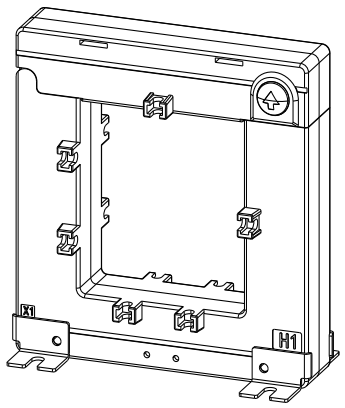

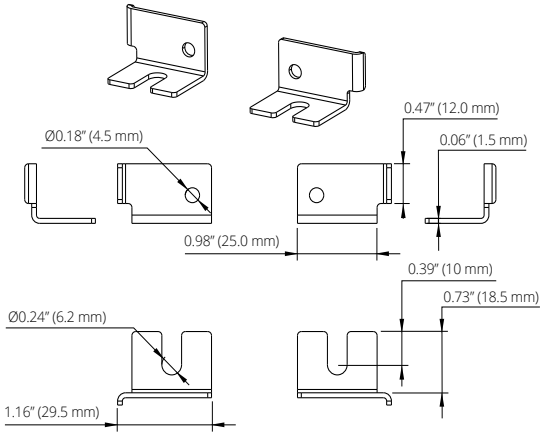

Installation Instructions

1. Press the buttons on both sides of the upper housing of CT to open it, so that the primary conductor cable can be passed through the current transformer window.

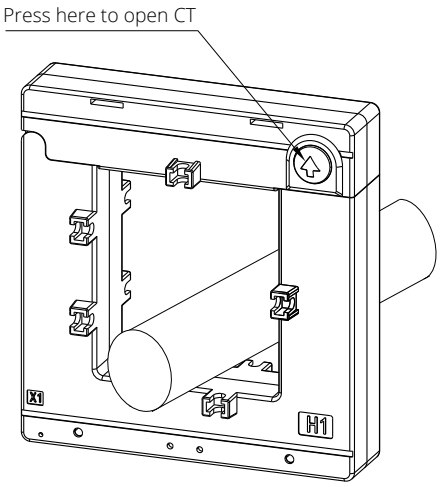

2. Insert the primary conductor cable through the window from H1 side, which must point towards the source. The white wire is the positive lead, and the black wire is the negative lead. This will ensure correct phase orientation during installation.

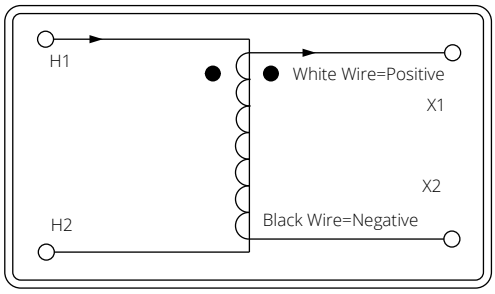

Ordering Information

	Model	-	*Rated Input*	:	*Rated Output*	-	*Frequency*
	AcuCT-3337A		600: 600A		80mA		Blank: 50/60Hz
			750: 750A		100mA		400: 50-400Hz
			800: 800A		250mV		
			1000: 1000A		333mV		
			1200: 1200A				
			1250: 1250A				
			1500: 1500A				
			2000: 2000A				
Ordering Example	**AcuCT-3337A**	**-**	**750**	**:**	**250mV**		
	AcuCT-3337A	**-**	**600**	**:**	**100mA**	**-**	**400**

+ **Accessory *(Included)***

Model	*Accessory*
ACUBRAC	SP6
Ordering Example	**ACUBRAC - SP6**

Mod-Tronic Instruments Ltd.
Brampton, Ontario, Canada
Tel: 1-800-794-5883
Web: www.mod-tronic.com
Email: sales@mod-tronic.com

Revision Date: September 2026 Version: 1.0.2
Specs Subject To Change Without Notice.

AcuCT A Series

AcuCT-4153A

Revenue Grade Split-Core
Current Transformer Datasheet



The AcuCT-4153A is a premium, revenue grade split-core current transformer designed for high accuracy energy measurements and power monitoring applications. Multiple output options and IEC 61869-2 Class 0.2 accuracy, makes it ideal for metering and billing verification. The user-friendly press-open design with a durable, compact form factor enables fast installation. An inclusive corrosion-resistant mounting accessory ensures a stable, secure connection even in the most demanding environments.

Features

- IEC 61869-2 Class 0.2 compliance across all rated currents and outputs.
- Multiple output options including 80mA, 100mA, 250mV, and 333mV
- Optional 50 – 400 Hz version for aerospace, marine, and shipboard power systems with an accuracy of 0.2% across the full range.
- Optional 50 Hz – 2 kHz version for motor current signature analysis, available on the 400 A and 600 A rating with 333 mV output.
- Press-open split-core design enables quick and simple installation.

Specifications

RATED CURRENT	400A, 600A,1000A, 1200A, 1250A, 1500A, 1600A, 2000A, 2500A, 3000A, 3500A, 4000A, 5000A
Current Range	5% - 120% of Rated Current
Output	80mA, 100mA, 250mV, 333mV
Accuracy	IEC 61869-2 Class 0.2 0.5% for Extended Frequency Variant
MECHANICAL/ENVIRONMENTAL	
Form Factor	Press Open Split-Core CT
Window Size	105 mm x 135 mm (4.13" x 5.31")
Exterior Dimensions	215 mm x 185 mm x 45 mm (8.46" × 7.28" × 1.77")
Case Material	UL 94V-0 Rated Flame Retardant
Lead Wires	2.5 m (8 ft), Twisted Pair, 16 / 18 AWG
Operating Temperature	-25°C to 70°C / -13°F to 158°F
Storage Temperature	-40°C to 80°C / -40°F to 176°F
Operating Humidity	Non-Condensing, 5% to 95% RH
Installation Conditions	Indoor Use
ELECTRICAL	
Wire Polarity	White=Positive, Black=Negative
Phase Orientation	H1 Points Towards Source
Frequency Range	50 / 60 Hz (Standard) 50 Hz – 400 Hz (400 Hz Models Only) 50 Hz – 2 kHz (2 kHz Model Only)
Burden	10 Ω @ 80 mA, 100 mA Output
Insulation Resistance	500 V / 100 MΩ min
Rated Continuous Thermal Current	120% of Rated Current
SAFETY/COMPLIANCE	
Withstand Voltage	5.0 kV / 1mA / 1min
Rated Voltage	600VAC, Rated CAT IV, PD3
Certifications & Compliance	CE, RoHS, UL Listed UL2808, CSA C22.2, IEC 61010-1, and IEC 61869-2

Dimensions

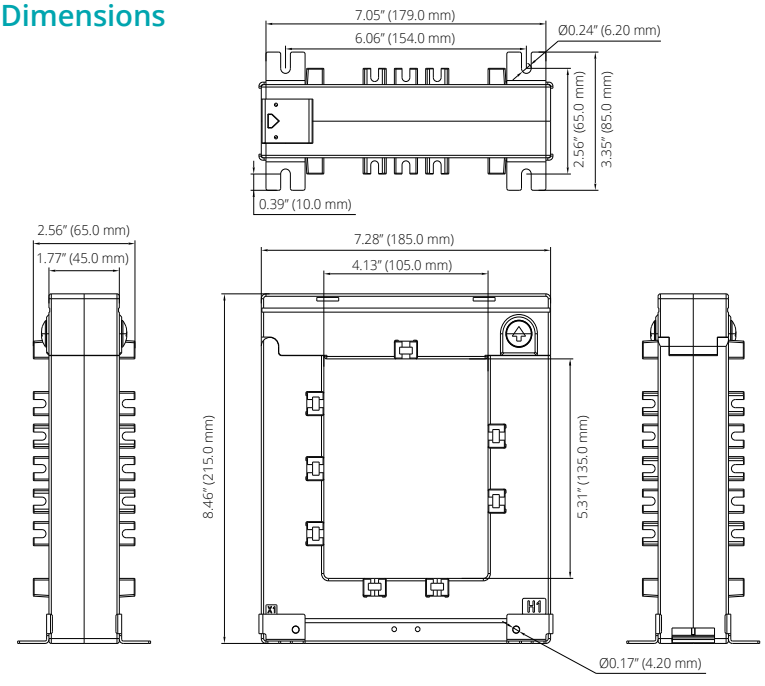

Typical Parameters

MODEL	CURRENT RATIO	FREQUENCY	ACCURACY	BURDEN / RESISTANCE	LEAD LENGTH
AcuCT-4153A-1000: 80mA	1000 / 80 mA	50 / 60 Hz	IEC 61869-2 Class 0.2	10 Ω	2.5 m
AcuCT-4153A-1200: 80mA	1200 / 80 mA	50 / 60Hz	IEC 61869-2 Class 0.2	10 Ω	2.5 m
AcuCT-4153A-1250: 80mA	1250 / 80 mA	50 / 60Hz	IEC 61869-2 Class 0.2	10 Ω	2.5 m
AcuCT-4153A-1500: 80mA	1500 / 80 mA	50 / 60Hz	IEC 61869-2 Class 0.2	10 Ω	2.5 m
AcuCT-4153A-1600: 80mA	1600 / 80 mA	50 / 60Hz	IEC 61869-2 Class 0.2	10 Ω	2.5 m
AcuCT-4153A-2000: 80mA	2000 / 80 mA	50 / 60Hz	IEC 61869-2 Class 0.2	10 Ω	2.5 m
AcuCT-4153A-2500: 80mA	2500 / 80 mA	50 / 60Hz	IEC 61869-2 Class 0.2	10 Ω	2.5 m
AcuCT-4153A-3000: 80mA	3000 / 80 mA	50 / 60Hz	IEC 61869-2 Class 0.2	10 Ω	2.5 m
AcuCT-4153A-3500: 80mA	3500 / 80 mA	50 / 60Hz	IEC 61869-2 Class 0.2	10 Ω	2.5 m
AcuCT-4153A-4000: 80mA	4000 / 80 mA	50 / 60Hz	IEC 61869-2 Class 0.2	10 Ω	2.5 m
AcuCT-4153A-5000: 80mA	5000 / 80 mA	50 / 60Hz	IEC 61869-2 Class 0.2	10 Ω	2.5 m
AcuCT-4153A-1000: 100mA	1000 / 100 mA	50 / 60Hz	IEC 61869-2 Class 0.2	10 Ω	2.5 m
AcuCT-4153A-1200: 100mA	1200 / 100 mA	50 / 60Hz	IEC 61869-2 Class 0.2	10 Ω	2.5 m
AcuCT-4153A-1250: 100mA	1250 / 100 mA	50 / 60Hz	IEC 61869-2 Class 0.2	10 Ω	2.5 m
AcuCT-4153A-1500: 100mA	1500 / 100 mA	50 / 60Hz	IEC 61869-2 Class 0.2	10 Ω	2.5 m
AcuCT-4153A-1600: 100mA	1600 / 100 mA	50 / 60Hz	IEC 61869-2 Class 0.2	10 Ω	2.5 m
AcuCT-4153A-2000: 100mA	2000 / 100 mA	50 / 60Hz	IEC 61869-2 Class 0.2	10 Ω	2.5 m
AcuCT-4153A-2500: 100mA	2500 / 100 mA	50 / 60Hz	IEC 61869-2 Class 0.2	10 Ω	2.5 m
AcuCT-4153A-3000: 100mA	3000 / 100 mA	50 / 60Hz	IEC 61869-2 Class 0.2	10 Ω	2.5 m
AcuCT-4153A-3500: 100mA	3500/100 mA	50 / 60Hz	IEC 61869-2 Class 0.2	10 Ω	2.5 m
AcuCT-4153A-4000: 100mA	4000/100 mA	50 / 60Hz	IEC 61869-2 Class 0.2	10 Ω	2.5 m
AcuCT-4153A-5000: 100mA	5000/100 mA	50 / 60Hz	IEC 61869-2 Class 0.2	10 Ω	2.5 m
AcuCT-4153A-1000: 250mV	1000/250 mV	50 / 60Hz	IEC 61869-2 Class 0.2		2.5 m
AcuCT-4153A-1200: 250mV	1200/250 mV	50 / 60Hz	IEC 61869-2 Class 0.2		2.5 m
AcuCT-4153A-1250: 250mV	1250/250 mV	50 / 60Hz	IEC 61869-2 Class 0.2		2.5 m
AcuCT-4153A-1500: 250mV	1500/250 mV	50 / 60Hz	IEC 61869-2 Class 0.2		2.5 m
AcuCT-4153A-1600: 250mV	1600/250 mV	50 / 60Hz	IEC 61869-2 Class 0.2		2.5 m
AcuCT-4153A-2000: 250mV	2000/250 mV	50 / 60Hz	IEC 61869-2 Class 0.2		2.5 m
AcuCT-4153A-2500: 250mV	2500/250 mV	50 / 60Hz	IEC 61869-2 Class 0.2		2.5 m
AcuCT-4153A-3000: 250mV	3000/250 mV	50 / 60Hz	IEC 61869-2 Class 0.2		2.5 m
AcuCT-4153A-3500: 250mV	3500/250 mV	50 / 60Hz	IEC 61869-2 Class 0.2		2.5 m
AcuCT-4153A-4000: 250mV	4000/250 mV	50 / 60Hz	IEC 61869-2 Class 0.2		2.5 m
AcuCT-4153A-5000: 250mV	5000/250 mV	50 / 60Hz	IEC 61869-2 Class 0.2		2.5 m
AcuCT-4153A-1000: 333mV	1000/333 mV	50 / 60Hz	IEC 61869-2 Class 0.2		2.5 m
AcuCT-4153A-1200: 333mV	1200/333 mV	50 / 60Hz	IEC 61869-2 Class 0.2		2.5 m
AcuCT-4153A-1250: 333mV	1250/333 mV	50 / 60Hz	IEC 61869-2 Class 0.2		2.5 m
AcuCT-4153A-1500: 333mV	1500/333 mV	50 / 60Hz	IEC 61869-2 Class 0.2		2.5 m
AcuCT-4153A-1600: 333mV	1600/333 mV	50 / 60Hz	IEC 61869-2 Class 0.2		2.5 m
AcuCT-4153A-2000: 333mV	2000/333 mV	50 / 60Hz	IEC 61869-2 Class 0.2		2.5 m
AcuCT-4153A-2500: 333mV	2500/333 mV	50 / 60Hz	IEC 61869-2 Class 0.2		2.5 m
AcuCT-4153A-3000: 333mV	3000/333 mV	50 / 60Hz	IEC 61869-2 Class 0.2		2.5 m
AcuCT-4153A-3500: 333mV	3500/333 mV	50 / 60Hz	IEC 61869-2 Class 0.2		2.5 m
AcuCT-4153A-4000: 333mV	4000/333 mV	50 / 60Hz	IEC 61869-2 Class 0.2		2.5 m
AcuCT-4153A-5000: 333mV	5000/333 mV	50 / 60Hz	IEC 61869-2 Class 0.2		2.5 m

Mounting Accessory

A mounting kit is included with the CT for stable and reliable installation. Each kit includes 4 mounting brackets, 2 mounting screws (M4 x 55 mm), and 2 mounting nuts (M4 x 5 mm). Recommended tightening torque is 0.5 to 0.8 N·m.

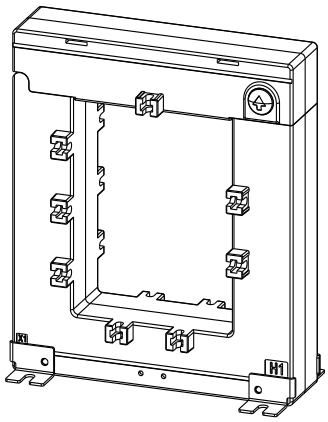

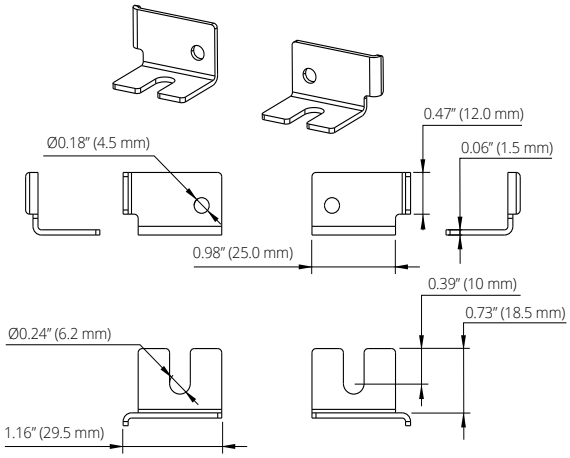

Installation Instructions

1. Press the buttons on both sides of the upper housing of CT to open it, so that the primary conductor cable can be passed through the current transformer window.

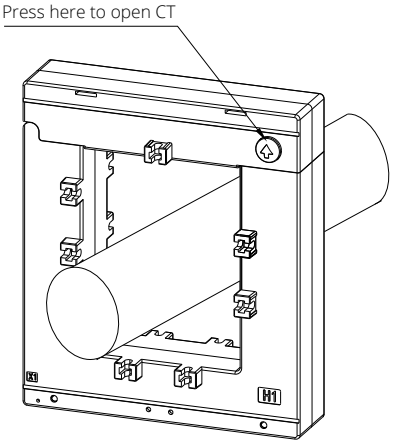

2. Insert the primary conductor cable through the window from H1 side, which must point towards the source. The white wire is the positive lead, and the black wire is the negative lead. This will ensure correct phase orientation during installation.

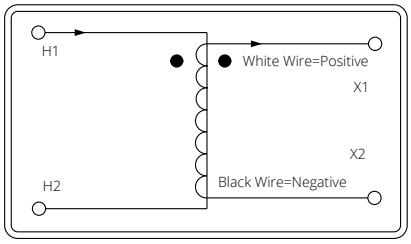

Ordering Information

	Model	-	Rated Input	:	Rated Output	-	Frequency
	AcuCT-4153A		1000: 1000A		80mA		Blank: 50/60Hz
			1200: 1200A		100mA		400: 50-400Hz
			1250: 1250A		250mV		
			1500: 1500A		333mV		
			1600: 1600A				
			2000: 2000A				
			2500: 2500A				
			3000: 3000A				
			3500: 3500A				
			4000: 4000A				
			5000: 5000A				
Ordering Example	**AcuCT-4153A**	**-**	**1500**	**:**	**250mV**		
	AcuCT-4153A	**-**	**1000**	**:**	**100mA**	**-**	**400**

Extended Frequency Variant

	Model	-	Rated Input	:	Rated Output	-	Frequency
	AcuCT-4153A		400: 400A		333mV		2K: 50Hz – 2kHz
			600: 600A				
Ordering Example	**AcuCT-4153A**	**-**	**400**	**:**	**333mV**	**-**	**2K**

+ **Accessory *(Included)***

Model	Accessory
ACUBRAC	SP8
Ordering Example	**ACUBRAC - SP8**

Mod-Tronic Instruments Ltd.
Brampton, Ontario, Canada
Tel: 1-800-794-5883
Web: www.mod-tronic.com
Email: sales@mod-tronic.com

Revision Date: September 2026 Version: 1.0.2
Specs Subject To Change Without Notice.