AcuCT A Series

Revenue Grade Split-Core Current Transformer Installation Guide



RoHS COMPLIANT

ACCUENERGY

Copyright © 2026 v1.0.1

All Accuenergy brands and trademarks in this document are the property of Accuenergy Inc. All other brands and trademarks may be the property of the respective owners of these rights.

This instruction may not be altered, copied or reproduced in whole or in part by any means without the expressed written consent of Accuenergy.

Please read this installation guide carefully before installation, operation, and maintenance of the AcuCT A Series current transformers.

The information contained in this document is believed to be accurate at the time of publication, however, Accuenergy assumes no responsibility for any errors which may appear here and reserves the right to make changes without prior notice as part of continuing improvements. Please ask the local representative for the latest product specifications before ordering.

The following symbols appear throughout this documentation and on the AcuCT A Series, in addition to the electrical warning of danger or safety risk during the installation and operation of the current transformers.



Electrical Shock Hazard: Contains information about procedures which must be followed to prevent the risk of electric shock and danger that can result in personal injury or death.



Safety Warning: Contains information about circumstances which if not considered may result in personal injury or death.



Info: An advance notice to provide additional information before an action is taken by the user.

Installation and maintenance of the AcuCT A Series shall only be performed by qualified, competent professionals who have received training and have experience with high voltage and current devices.

Accuenergy shall not be responsible or liable for any damage caused by improper installation and/or operation.

Table of Contents

Safety and Critical Handling Requirements 5

- Current Transformer Installation Safety 5
- Installation Requirements and Operating Limits 6
- Pre-Installation Safety Checks 6

Introduction 7

- Overview 7

CT Orientation, Polarity, and Wiring Identification 8

Standard Split-Core Installation 9

- Recommended Tools and Materials 9

CT Mounting Procedure 10

- Split-Core CT Installation 10
- Mounting Bracket Installation (If Applicable) 12
- Busbar Clamp Installation (If Applicable) 13
- Bolt and DIN Rail Mounting 14

Warnings and Installation Considerations 16

- Incorrect Installation Risk 16
- Common Installation Errors 16

Best Practices 17

- Accuracy Optimization 17
- Wiring Practices 17
- Installation Consistency 17

Commissioning Checklist 18

Safety and Critical Handling Requirements



Electrical Hazard

Secondary Shorting Is Not Required.
All AcuCT A Series models, including the 80 mA and 100 mA current outputs, incorporate internal open-circuit protection. The secondary does not develop hazardous open-circuit voltage, so it does not need to be short-circuited before the primary conductor is energized, and a shorting block is not required. Terminate the secondary leads to the meter input and keep the CT's protected from strain and abrasion.

Current Transformer Installation Safety

- Disconnect power before installing or servicing the CT. If live work is necessary, follow site-approved live-work procedures.
- Use lockout / tagout, arc-flash PPE, insulated tools, and required safety controls for the enclosure and voltage class.
- Confirm that the CT rated current, output type, rated voltage, burden, and environmental ratings are suitable for the installation.
- Inspect the CT before installation. Do not use a CT with cracked housing, damaged lead wires, loose latch mechanism, contaminated surfaces, or signs of overheating.
- Ensure the maximum conductor current does not exceed the CT rated current.
- Install indoors only unless the datasheet for the exact model and configuration states otherwise.
- Do not modify the CT housing, hinge, latch, mounting holes, lead wires, insulation system, or clamping hardware.
- Ensure CTs installed around conductors do not occupy more than 75% of the available wiring-space cross-sectional area, in accordance with applicable electrical codes.

Installation Requirements and Operating Limits

Parameter	Specifications	Operating Limits
Rated Voltage	600VAC	Do not use above the approved circuit voltage rating.
Measurement Category	CAT IV, PD3	Verify the model datasheet before installation.
Frequency Range	50 / 60Hz (Standard) 50 - 400 Hz (400 Hz Models only) 50 - 2 Khz (2 kHz Models only)	Confirm the monitored system frequency is within the model rating.
Operating Temperature	-25 °C to 70 °C (-13°F to 158°F)	Confirm ambient temperature inside the enclosure.
Humidity	Non-Condensing, 5% to 95% RH	Prevent condensation and water ingress.
Current Range	5% - 120% of Rated Current	Select CT ratio suitable for the expected operating current.
Secondary Output	80 mA, 100 mA, 250 mV, or 333 mV, depending on model.	Use only with compatible meter inputs and meter ratio settings.

Pre-Installation Safety Checks

Condition	80 mA, 100 mA, 250 mV, 333 mV Output
Open-Circuit Risk	Low compared with current-output CTs; still keep wiring terminated and protected.
Shorting Requirement	No. Follow the wiring instructions provided by the manufacturer of the meter.
Installation Priority	Terminate the secondary leads to the meter before or during installation to avoid wiring errors.

Introduction

Overview

The AcuCT A Series is a revenue-grade split-core current transformers intended for metering and power monitoring applications. Typical installation is required at locations where the current transformer must be installed around an existing conductor or busbar without disconnecting the primary cable. The AcuCT A series supports current-output and voltage-output options depending on the model. The mounting kits for the AcuCT-050A, AcuCT-075A, AcuCT-100A, AcuCT-142A, and AcuCT-200A are optional and purchased as required.

With purchase, the AcuCT-3337A includes the ACUBRAC-SP6 mounting kit, and the AcuCT-4153A includes the ACUBRAC-SP8 mounting kit.

Model	Rated Primary Current Options	Rated Secondary Output Options	Window Size	Exterior Dimensions	Optional Accessory
AcuCT-050A	20A, 30A, 50A, 60A, 80A, 100A, 150A	80mA, 100mA, 250 mV, 333mV	Ø13.0mm (0.51")	83mm x 83mm x 45mm (3.27″ x 3.27″ x 1.77″)	ACUBRAC - SP5
AcuCT-075A	50A, 75A, 80A, 100A, 125A, 150A, 200A, 250A	80mA, 100mA, 250mV, 333mV	19mm x 19mm (0.75" x 0.75")	77mm x 85mm x 32mm (3.03" x 3.35" x 1.26")	ACUBRAC - SP7
AcuCT-100A	100A, 125A, 150A, 200A, 250A	80mA, 100mA, 250mV, 333mV	25.5mm x 32.0mm (1.00" x 1.26")	79.5mm x 81mm x 28mm (3.13″ x 3.19″ x 1.10″)	ACUBRAC - SP9
AcuCT-142A	200A, 250A, 300A, 400A, 500A, 600A	80mA, 100mA, 250mV, 333mV	36mm x 36mm (1.42" × 1.42")	89mm x 96mm x 32mm (3.50" x 3.78" x 1.26")	ACUBRAC - SP7
AcuCT-200A	400A, 500A, 600A, 750A, 800A, 1000A, 1200A, 1500A	80mA, 100mA, 250mV, 333mV	51mm x 51mm (2.01" × 2.01")	111mm x 115mm x 32mm (4.37" × 4.53" × 1.26")	ACUBRAC - SP7
AcuCT-3337A	600A, 750A, 800A, 1000A, 1200A, 1250A, 1500A, 2000A	80mA, 100mA, 250mV, 333mV	85mm x 95mm (3.35" × 3.74")	160mm x 151mm x 32mm (6.30" x 5.94" x 1.26")	ACUBRAC – SP6 / Busbar Clamping Screws
AcuCT-4153A	1000A, 1200A, 1250A, 1500A, 1600A, 2000A, 2500A, 3000A, 3500A, 4000A, 5000A	80mA, 100mA, 250mV, 333 mV	105mm x 135mm (4.13" x 5.31")	215mm x 185mm x 45mm (8.46" × 7.28" × 1.77")	ACUBRAC – SP8 / Busbar Clamping Screws

CT Orientation, Polarity, and Wiring Identification

Proper orientation is required for positive real power, correct power factor sign, and correct phase relationship between current and voltage inputs.

Info

CT Polarity Should Not be Inferred.

If commissioning shows negative power, reversed power factor, or an unexpected phase angle, verify both CT orientation and voltage phase assignment. Only swap X1/X2, S1/S2, or reverse the CT after confirming the wiring diagram and meter configuration.

Marking / Feature	Interpretation During Installation
P1-K or H1 / Source Side	For AcuCT-100A, P1-K points toward the source. For AcuCT-050A, AcuCT-075A, AcuCT-142A, AcuCT-200A, AcuCT-3337A, and AcuCT-4153A, primary conductor enters from the H1 side.
P2-K or H2 / Load Side	For AcuCT-100A, P2-L points toward the load. For AcuCT-050A, AcuCT-075A, AcuCT-142A, AcuCT-200A, AcuCT-3337A, and AcuCT-4153A, primary conductor exits towards the H2 or load side. Maintain consistent orientation across all phases.
X1 or S1 / Positive Secondary	Connect the white lead to the positive / high CT input of the meter or relay.
X2 or S2 / Negative Secondary	Connect the black lead to the negative / return CT input of the meter or relay.
Single Phase Conductor	Install one current transformer around single phase conductor only. Do not pass multiple phase conductors through the same CT for normal metering.
Lead Routing	Route the leads of CT away from sharp edges, moving parts, hot surfaces, and high-noise conductors. Keep secondary wiring as short as practically possible.

Standard Split-Core Installation

Recommended Tools and Materials

- Use appropriate insulated hand tools for the enclosure and voltage class.
- Cable ties or clamps should be used for secondary lead strain relief.
- Mounting brackets, bolt-mount kit, DIN rail kit, clamping screws, panel screws, nuts, and washers as required by the selected mounting method.
- Multimeter and commissioning meter or software for final verification.

CT Mounting Procedure

AcuCT A Series mounting accessories are optional and purchased as per requirement, except for the AcuCT-3337A and AcuCT-4153A, which includes the respective mounting accessories. Mounting hardware is used to secure the CT to a panel, DIN rail, cable, or busbar support surface.

Model	Bracket-to-CT Hardware	Mounting Kit and Installation Notes
AcuCT-050A	M4 x 55 mm Screw with M4 Nut	ACUBRAC - SP5 Recommended Bracket Torque: 0.5-0.8 N.m.
AcuCT-075A	M4 x 40 mm Screw with M4 Nut	ACUBRAC - SP7 Recommended Bracket Torque: 0.5-0.8 N.m.
AcuCT-100A	Mounting clips to be placed in the slots located by the removable top section.	ACUBRAC - SP9
AcuCT-142A or AcuCT-200A	M4 x 40 mm Screw with M4 Nut	ACUBRAC - SP7 Recommended Bracket Torque: 0.5-0.8 N.m.
AcuCT-3337A	M4 x 45 mm Screw with M4 Nut	ACUBRAC - SP6 Busbar or Cable Clamp Installation
AcuCT-4153A	M4 x 55 mm Screw with M4 Nut	ACUBRAC - SP8 Busbar or Cable Clamp Installation

Split-Core CT Installation

Step 1: System Preparation

De-energize the circuit where possible, apply lockout/tagout, and verify absence of voltage according to site procedures.

Step 2: Verify the CT and conductor

Confirm the current transformer model, current ratio, secondary output type, conductor phase, conductor direction, and available window clearance.

Step 3: Connect CT Secondary Leads

Connect the CT secondary leads to the appropriate CT terminals on the meter or relay.

Info

Ensure proper secondary lead routing. Route CT secondary leads away from sharp edges, moving parts, high-temperature surfaces, and high-noise conductors. Avoid unnecessary lead extensions as additional lead resistance may increase burden and affect the current-output of the CT.

Step 4: Open the Split-Core CT

Simultaneously press the two side buttons or latch mechanism on the CT housing. Secure the CT using the required mounting method, such as mounting bracket kit, bolt mounting kit, DIN rail kit, or busbar / cable clamping hardware, as applicable to the model.

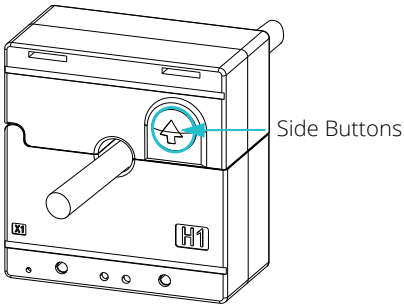

Figure 1 Open the CT

Step 5: Conductor Position

1. Place the current transformer with H1 facing the source side of circuit as depicted in Figure 2.
2. For AcuCT-100A, orient P1-K toward the source. Keep the same orientation convention across all phases.

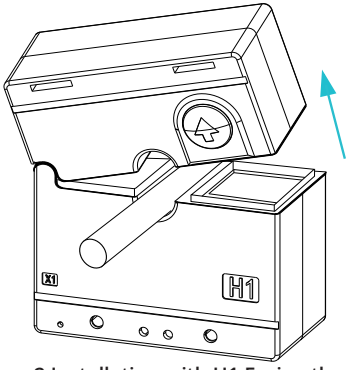

Figure 2 Installation with H1 Facing the Source

Step 6: Center the Conductor

Keep the conductor or busbar centered in the CT window where practical. Avoid mechanical stress on the CT body, terminals, hinge, latch, or secondary leads.

Step 7: Close the CT

Close the CT core until it fully latches. A small air gap can reduce measurement accuracy, so verify the core faces are clean and fully closed.

Mounting Bracket Installation (If Applicable)

Info

Depending on the AcuCT A Series model, mounting brackets are considered optional or inclusive and should be ordered as per the respective model.

Step 1: Choose Mounting Screws

1. The mounting base plate includes 6.2 mm elongated holes.
2. The mounting slots accommodate either M5, M6 screws or bolts.
3. Use M5 or M6 based on the site standard and available mounting surface.

Step 2: Position the Mounting Brackets

1. For AcuCT-050A, AcuCT-075A, AcuCT-142A, AcuCT-200A, AcuCT-3337A, and AcuCT-4153A, position the mounting brackets on the current transformer body.
2. Fasten the brackets using screws and nuts from the mounting accessories and tighten until secure and flush, without over-tightening.
3. For AcuCT-100A, position the mounting clips to be placed in the slots located by the removable top section.

Step 3: Panel or Backplate CT Mount

1. Place the CT with the mounting bracket onto the mounting surface and insert the M5 or M6 screws through the elongated slots.
2. Insert all screws loosely first to allow alignment as depicted in Figure 3.
3. For fine alignment, adjust the current transformer position using the elongated holes, then tighten all panel screws firmly so the CT cannot move, without over-tightening.

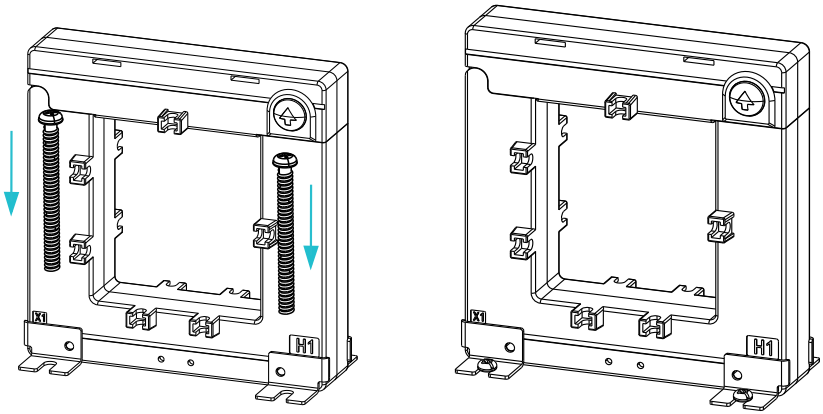

Figure 3 Mounting Screw in AcuCT-3337A to Panel

Step 4: Final Verification

1. Confirm the assembly is stable, flat against the surface, and does not wobble.
2. Confirm the secondary leads are terminated at the meter CT input before energizing the primary conductor. Shorting the secondary is not required.
3. Ensure the CT, latch, lead wires, and terminals remain accessible for wiring and service.
4. Repeat steps 1-6 for the remaining phases if required.

Busbar Clamp Installation (If Applicable)

For AcuCT-3337A and AcuCT-4153A, clamping hardware is used to secure the busbar inside the current transformer window. For clamp installation, use the clamping screws, pressure washers or retainers.

1. Place the busbar or cable in the CT window, centered where practical, and insert a nut into each molded slot in the CT housing. The slot holds the nut captive and prevents it from rotating, no wrench or second tool is required.
2. Insert the clamping screws from both sides through the nuts and fit a clamping knob to each screw on the busbar side, as depicted in Figure 4. Tighten the clamping screws evenly until the conductor or busbar is secure and the CT cannot rock, slide, or twist as depicted in Figure 4.
3. Verify that the secondary leads are protected from strain and abrasion.

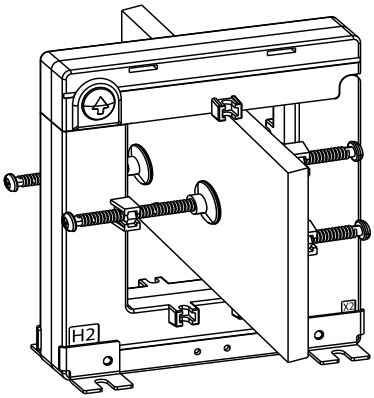

Figure 4 Busbar Clamped to AcuCT-3337A

Safety Warning

Avoid mechanical stress. The CT must not carry the weight of unsupported busbars or cables. Provide independent mechanical support for the conductor or busbar where required. Excess mechanical stress may loosen connections, cause insulation damage, or result in conductor movement under fault conditions, which can lead to electric shock or arc-flash.

Info

For normal metering, install each CT around only one phase conductor. Routing the supply and return conductors, or multiple different phases, through the same current transformer can cancel or distort the measured current.

Bolt and DIN Rail Mounting

The optional mounting kit for AcuCT-100A includes two kits for installation, bolt mounting kit and DIN rail mounting kit.

Bolt mounting kit, as depicted in Figure 5, is used for secure installation and DIN rail mounting kit is used with standard 35mm DIN rail for enclosure installations as depicted in Figure 6.

After installation, verify the current transformer is fully seated, stable, and accessible for wiring and service.

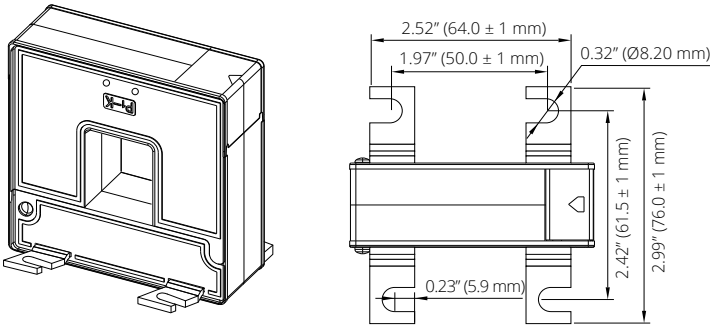

Figure 5 Dimensions of Bolt Mounting Kit

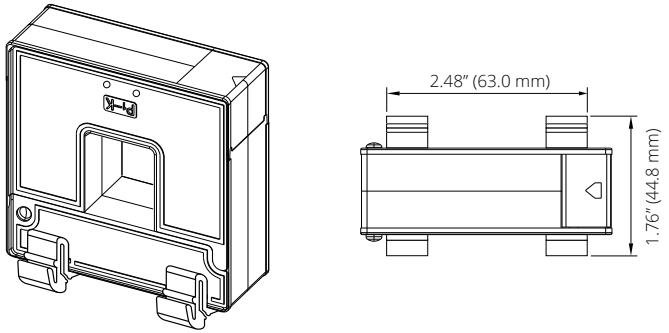

Figure 6 DIN Rail Mounting of AcuCT-100A

Warnings and Installation Considerations

Incorrect Installation Risk

Improper installation may result in inaccurate measurements, negative or reverse readings, reducing system reliability.

Common Installation Errors

Frequent errors observed are installing the CT backwards with incorrect polarity or simultaneously clamping the CT around multiple different phase conductors or mixing current and voltage phases. If the latch is not properly closed, it leaves the CT partially open leading to incorrect readings.

Best Practices

Accuracy Optimization

To achieve optimal performance, keep the CT core clean and fully closed. The AcuCT A Series meets accuracy specifications but place the conductor in center within the window to ensure maximum accuracy. Use cable ties to hold the CT in position and align the conductor. Maintain correct phase alignment with voltage inputs.

Wiring Practices

Route the CT secondary leads away from high-voltage conductors and avoid unnecessary lead extensions. To avoid noise interference, use twisted shielded wiring.

Installation Consistency

Maintain a consistent CT orientation across all measured phases and clearly label the CT, such as Phase A, B, C or R, Y, B. If possible, complete the wiring prior to CT installation.

CT Secondary Safety

Condition	80 mA, 100 mA, 250 mV, 333 mV Secondary
Open-Circuit Risk	Low
Shorting Required	No
Connect Leads Before Installation	Recommended

Commissioning Checklist

Check	Acceptance Criteria	Result
Mechanical Installation	CT is stable, correctly mounted, and not carrying conductor/ busbar mechanical load.	Pass / Fail
Core Closure	Split-core is fully closed and latched; no visible air gap is present.	Pass / Fail
Orientation	H1 / Source side or P1-K / Source side is facing the source; orientation is consistent across phases.	Pass / Fail
Secondary Polarity	White lead is connected to positive current input of the meter. Black lead is connected to negative current input of the meter.	Pass / Fail
Secondary Circuit	Secondary leads are terminated at the meter CT input before energizing.	Pass / Fail
Meter Configuration	CT ratio, secondary output type, phase assignment, and scaling are configured correctly.	Pass / Fail
Phase Association	Current input phase matches the corresponding voltage phase at the meter.	Pass / Fail
Initial Readings	Current, real power, power factor, and phase angle readings are reasonable for the known load direction.	Pass / Fail
Lead Routing	Secondary leads are protected from sharp edges, heat, strain, and high-noise conductors.	Pass / Fail

For current transformers with mA output, verify the meter reading with a known load or calibrated test source. For mV output, verify the voltage-output values using a compatible high-impedance meter input.

ACCUENERGY

MAKE ENERGY USAGE SMARTER

For additional help please reach out to:

Accuenergy Sales

sales@mod-tronic.com

1-800-794-5883

Accuenergy Technical Support

sales@mod-tronic.com

1-800-794-5883

ISO 9001, 14001 & 45001 Certified

ISO 27001 & 50001 Certified

BBB ACCREDITED BUSINESS



Mod-Tronic Instruments Ltd.

1-800-794-5883

www.mod-tronic.com

sales@mod-tronic.com

Revision Date: September 2026 Version: 1.0.1

Specs Subject To Change Without Notice.