AcuCT-C Series

5A to 80/100mA Current Transformer Converter Datasheet

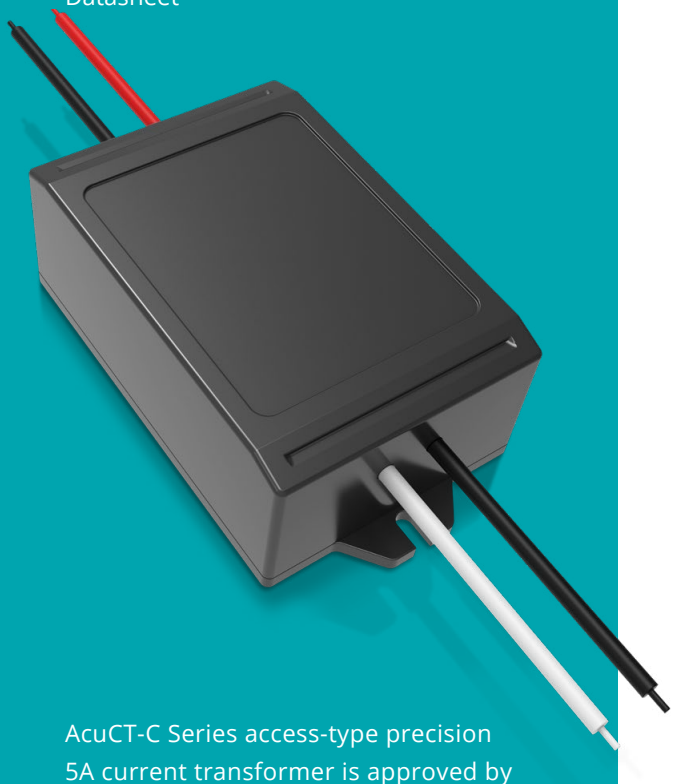

AcuCT-C Series access-type precision 5A current transformer is approved by Measurement Canada for rated systems higher than 400A and 800A. Designed with a closed magnetic core, the CT's main benefit is derived from its ultra-micro crystal magnetic core and an advanced secondary winding process to provide stable performance and high accuracy 0.15 measurement.

Features

- Measurement Canada Approved for rated systems higher than 400A or 800A
- Approval Number: AE-2615
- Revenue grade accuracy class 0.15
- Input options: 5A
- Two output options: 80mA, 100mA
- Used for high accuracy metering and billing applications

CE RoHS COMPLIANT

Specifications

RATED CURRENT	5A
Current Range	1%-120% of rated current
Output	80mA, 100mA
Ratio Error	<0.5%
Phase Error	<8'
Accuracy	IEEE Std C57.13-2016 0.15
MECHANICAL/ENVIRONMENTAL	
Form Factor	Acess-Type
Exterior Dimensions	53.5mm x 78.5mm x 30.5mm 53.5" x 9.06" x 1.38"
Case Material	Epoxy encapsulated housing
Lead Wires	12' (30cm), 16AWG@5A; 12' (30cm), 18AWG@80/100mA;
Operating Temperature	-25°C to 70°C
Storage Temperature	-25°C to 75°C
Operating Humidity	Non-condensing, 0 to 95% RH
Installation Conditions	Indoor Use
ELECTRICAL	
Wire Polarity	White=Positive, Black=Negative
Phase Orientation	H1 (red) points towards source
Frequency Range	50-60Hz
Burden	B0.005(0.125VA)
Withstand Voltage	3,000Vac
Insulation Resistance	500V/100MΩ min
SAFETY/COMPLIANCE	
Rated Voltage	600Vac
Certifications	CE Approved & RoHS Compliant, Measurement Canada Approved

Dimensions

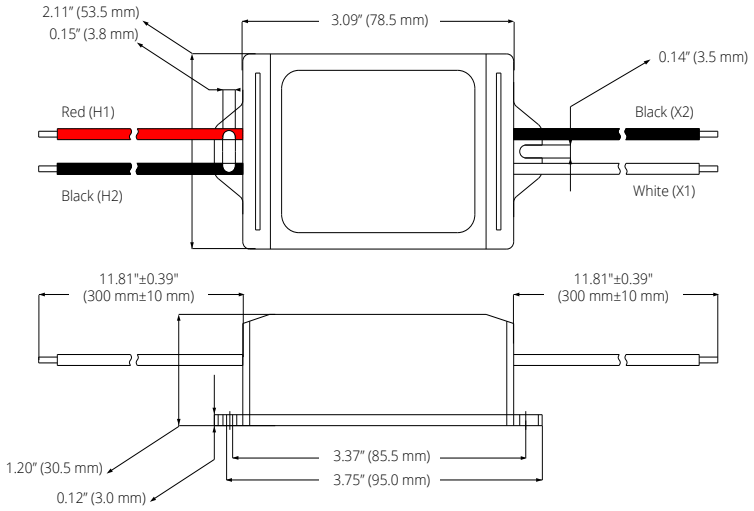

Typical Accuracy Curve

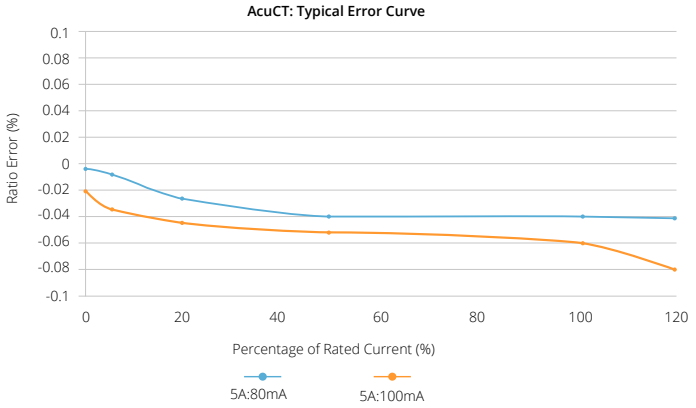

Accuracy Class 0.15

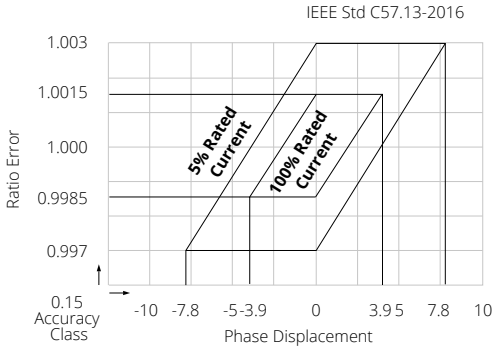

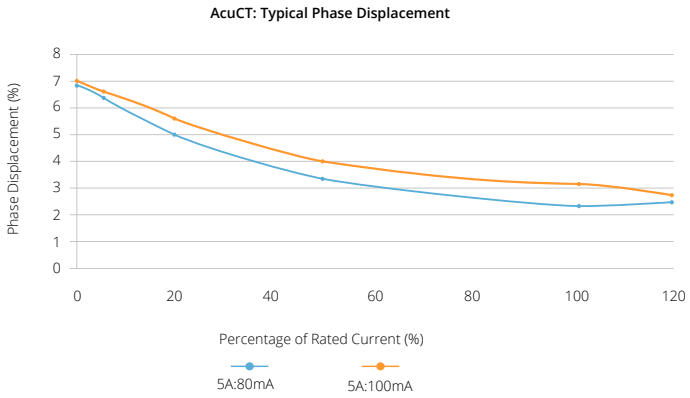

Installation Instructions

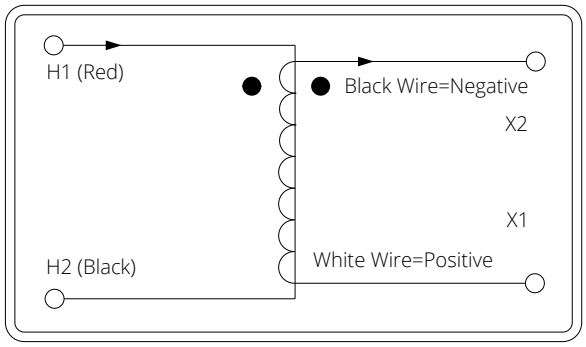

Mod-Tronic Instruments Ltd.
1-800-794-5883
www.mod-tronic.com
sales@mod-tronic.com

Revision Date: August 2023 Version: 1.0.1
Specs Subject To Change Without Notice.

Ordering Information

Integrator	*Model*		*Rated Input*		*Rated Output*
Ordering Example	**AcuCT-C**	**-**	**5**	**:**	**100mA**
	AcuCT-C		5: 5A		80mA
					100mA