AcuCT Flex Pro Series

Rogowski Coil CT for Protection Relays
Datasheet



The AcuCT Flex Pro Series Rogowski coil is a low-power passive current sensor specifically designed for protection relay systems and advanced monitoring applications. Compliant with IEC 61869-10, the CT meets protection class 5P and is capable to withstand fault currents up to 50kA. The CT delivers highly linear performance to minimize distortion across a wide dynamic range, enabling accurate current measurement for modern Intelligent Electronic Devices (IEDs). Made with a flexible rope-like form factor, it is a versatile integration choice for switchgear and control systems that require reliable protection.

Features

- IEC 61869-10 compliant, 5P50kA protection accuracy.
- Combines protection and measurement functions in a single sensor.
- Exceptional linearity across a wide current range with minimal deviation.
- Flexible, lightweight and rope-like form factor for effortless installation.
- Factory-calibrated for accuracy.
- RJ45 connectors simplify integration with protection relays.
- Mounting bracket accessory available for bushing applications.

Specifications

MECHANICAL/ENVIRONMENTAL	
Form Factor	Flexible Current Transformer
Window Size	RCT16 - 106.0mm (4.17") RCT24 - 178.0mm (7.01")
External Diameter	RCT16 - 143.0mm (5.63") RCT24 - 207.0mm (8.13")
Coil Length	RCT16 - 400.0mm (15.75") RCT24 - 600.0mm (23.62")
Case Material	Orange Thermoplastic Rubber UL 94V-0 Rated Flame Retardant
Lead Wires	1000V UL Style 20940, 26AWG, 2 Meters long
Connector	RJ45 (CAT-6)
Operating Temperature	-25°C to 70°C / -4°F to 158°F
Temperature Drift	+/- 0.007% per °C
Operating Humidity	Non-Condensing, 0 to 95% RH
Environmental Rating	IP61 (IP68 Extended Environment Rating Option)

ELECTRICAL CHARACTERISTICS	
Rated Primary Current (Ipr)	500A
Rated Secondary Voltage (Usr)	225mV/270mV
Rated Transformation Ratio	500A/225 mV@50 Hz, 270 mV@60 Hz
Rated Short-Time Thermal Current (Itr)	50kA/3sec
Rated Extended Primary Current Factor (kpcr)	Kpcr=10, Iepr=5kA
Linear Measurement Frequency	9kHz
Rated Burden	2MΩ/50 pF
Rated Frequency	50/60 Hz
Protection Accuracy	5P50kA
Measurement Accuracy	+/- 0.5%

SAFETY/COMPLIANCE	
Working Voltage	1000V CAT III, 600V CAT IV
Dielectric Strength	7400VAC @ 50/60Hz for 5 seconds
Certifications	CE, RoHS, cURus (E359521)
Standards	IEC 61869-1, IEC 61869-10

Dimensions

AcuCT Flex Pro Dimensions

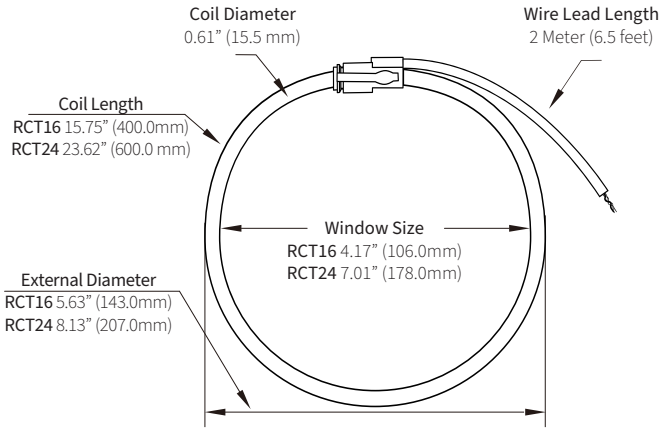

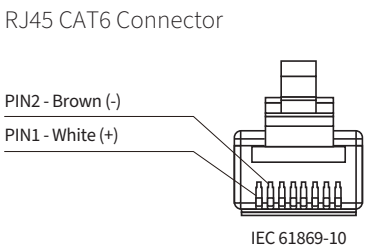

Mounting Bracket Dimensions

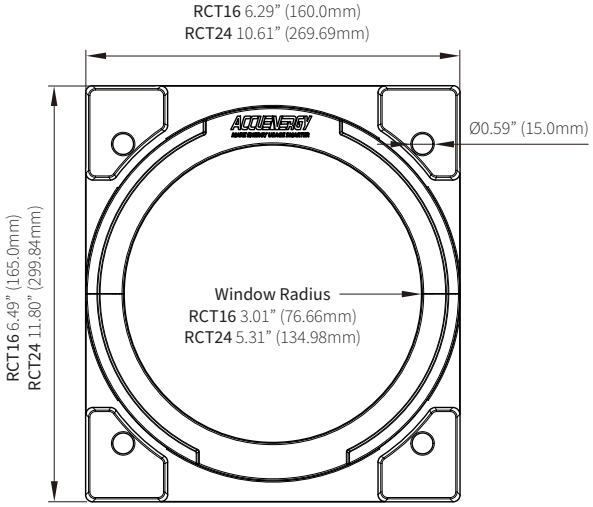

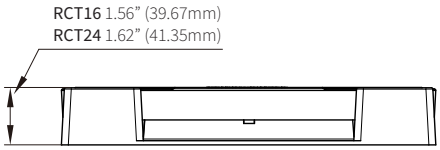

Error Curve

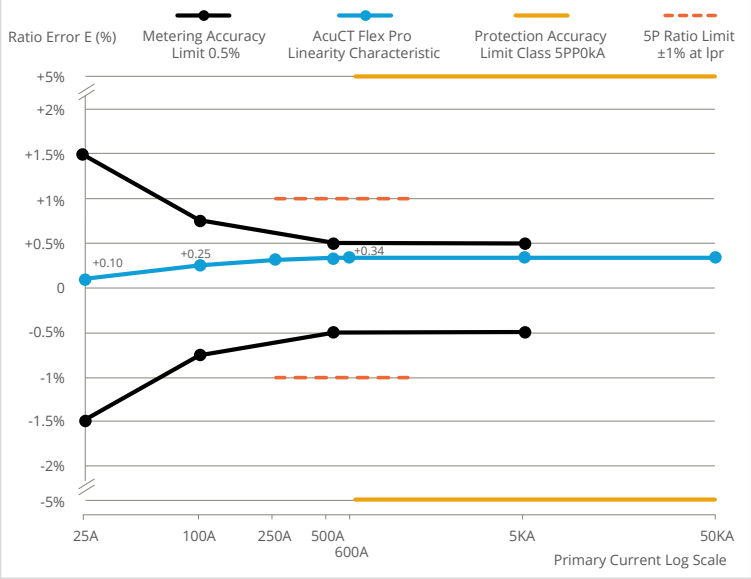

Accessories/Options



Rogowski Coil Mounting Bracket

Engineered for bushing applications, the mounting bracket works seamlessly with the AcuCT Flex Pro Series, making sure the Rogowski coil can be centred securely around the conductor, offering optimized accuracy and robust protection. The mounting bracket is available in two sizes and simplifies installation and integration with protection relay systems.



IP68 Environmental Protection for Outdoor Use

The IP68 Rated option protects the CT's electrical components from dust, dirt, and solid ingress and provides total water protection with the AcuCT Flex Pro Series' waterproof enclosure, enabling robust performance under challenging environmental conditions.



Extended Temperature Rating

The Extended Temperature Rating allows the AcuCT Flex Series coil to maintain high precision while in continuous contact with conductors at temperatures up to 125°C (257°F).

Ordering Information

	Model	-	*Rated Primary Current*	-	*Max Primary Current*	-	*Lead Length*	-	*Options*
	RCT16		500P: 500		50KA		Blank -Standard 2 Meters (6.5ft)		Blank - For other application
	RCT24						5m - 5 Meters (16.4ft)		ET (Extended Temp.)
									IP68
Ordering Example	**RCT16**	**-**	**500P**	**-**	**50KA**	**-**			
	RCT24	**-**	**500P**	**-**	**50KA**	**-**	**5M**	**-**	**ET-IP68**

Mounting Bracket Option

	Model	-	*Accessory*
	RCT16		MB
	RCT24		
Ordering Example	**RCT16**	**-**	**MB**
	RCT24	**-**	**MB**

Mod-Tronic Instruments Ltd.
1-800-794-5883
www.mod-tronic.com
sales@mod-tronic.com

Revision Date: September 2026 Version: 1.0.5
Specs Subject To Change Without Notice.