ACCUENERGY

AcuCT Hinged EF Series

Extended Frequency Hinged Split-Core Current Transformer



DATASHEET

AcuCT Hinged EF Series

AcuCT-H063

Extended Frequency Hinged Split-Core Current Transformer Datasheet



Ultra-compact design with a hinged opening, the AcuCT Hinged extended frequency split-core current transformers are high-accuracy sensors for electrical current signature analysis up to 2kHz. With an optimized frequency response, the AcuCT-H063 is ideally suited for motor current signature analysis and harmonic current analysis. It can be used for branch circuit monitoring in crowded electrical panels. The installer-friendly, hinged design facilitates fast installation without cable or wire disconnection.

Features

- High accuracy with 0.5% ratio error
- Inherently safe 333mV output
- Hinged split-core design for quick installation
- Compact design for electrical panels with limited space
- UL Recognized

CE cULus RoHS COMPLIANT

Mod-Tronic Instruments Ltd.
1-800-794-5883
www.mod-tronic.com
sales@mod-tronic.com

Revision Date: September 2026 Version: 1.0.1
Specs Subject To Change Without Notice.

Specifications

RATED CURRENT	5A, 10A
Current Range	5% - 120% of rated current
Output	333mV
Ratio Error	0.5%
MECHANICAL/ENVIRONMENTAL	
Form Factor	Hinged Split-Core CT
Window Size	16.0mm (0.63")
Exterior Dimensions	36.0mm x 30.5mm x 53.0mm 1.42" x 1.20" x 2.09"
Case Material	Black Nylon, UL 94V-0
Lead Wires	2.5m (8ft) Twisted Pair, 22AWG
Operating Temperature	-25 °C to 70 °C / -13 °F to 158 °F
Operating Humidity	Non-Condensing, 0 to 95% RH
Installation Conditions	Indoor Use
ELECTRICAL	
Wire Polarity	White=Positive, Black=Negative
Phase Orientation	Arrow Points Towards Load
Overload Factor	≤ ±3% up to 10x Overload
Phase Displacement	≤ ±60' @100%-120%of Rated Current ≤ ±100' @20%-100%of Rated Current ≤ ±120' @5%-20%of Rated Current
Frequency Range	50/60 Hz
Frequency Response	50Hz – 2kHz
Turns @ Internal Resistance	5A: 3000:1@200Ω 10A: 3000:1@100Ω
Rated Continuous Thermal Current	120% of Rated Current
SAFETY/COMPLIANCE	
Withstand Voltage	3.0kV / 1mA / 1min
Rated Voltage	600 VAC
Certifications	CE, RoHS, cURus (E359521)

Dimensions

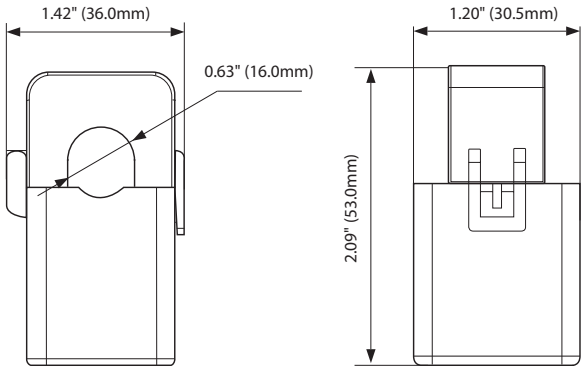

Ordering Information

	Model	-	*Rated Input*	:	*Rated Output*	-	*Frequency Bandwidth*
	AcuCT-H063		5: 5A		333mV		2K: 2kHz
			10: 10A				
Ordering Example	**AcuCT-H063**	**-**	**10**	**:**	**333mV**	**-**	**2K**

AcuCT Hinged EF Series

AcuCT-H100

Extended Frequency Hinged Split-Core Current Transformer Datasheet



Ultra-compact design with a hinged opening, the AcuCT Hinged extended frequency split-core current transformers are high-accuracy sensors for electrical current signature analysis up to 2kHz. With an optimized frequency response, the AcuCT-H100 is ideally suited for motor current signature analysis and harmonic current analysis. It can be used for branch circuit monitoring in crowded electrical panels. The installer-friendly, hinged design facilitates fast installation without cable or wire disconnection.

Features

- High accuracy with 0.5% ratio error
- Inherently safe 333mV output
- Hinged split-core design for quick installation
- Compact design for electrical panels with limited space
- UL Recognized

Mod-Tronic Instruments Ltd.
1-800-794-5883
www.mod-tronic.com
sales@mod-tronic.com

Revision Date: September 2026 Version: 1.0.1
Specs Subject To Change Without Notice.

Specifications

RATED CURRENT	25A, 50A
Current Range	5% - 120% of Rated Current
Output	333mV
Ratio Error	0.5%
MECHANICAL/ENVIRONMENTAL	
Form Factor	Hinged Split-Core CT
Window Size	25.4mm (1.00")
Exterior Dimensions	50.8mm x 38.6mm x 70.1mm 2.00" x 1.52" x 2.76"
Case Material	Black Nylon, UL 94V-0
Lead Wires	2.5m (8ft) Twisted Pair, 22AWG
Operating Temperature	-25°C to 70°C / -13°F to 158°F
Operating Humidity	Non-Condensing, 0 to 95% RH
Installation Conditions	Indoor Use
ELECTRICAL	
Wire Polarity	White=Positive, Black=Negative
Phase Orientation	Arrow Points Towards Load
Overload Factor	≤ ±3% up to 10x Overload
Phase Displacement	≤ ±60' @100%-120%of Rated Current ≤ ±100' @20%-100%of Rated Current ≤ ±120' @5%-20%of Rated Current
Frequency Range	50/60 Hz
Frequency Response	50Hz – 2kHz
Turns @ Internal Resistance	25A: 3000:1@40Ω 50A: 3000:1@20Ω
Rated Continuous Thermal Current	120% of Rated Current
SAFETY/COMPLIANCE	
Withstand Voltage	3.0KV / 1mA / 1min
Rated Voltage	600VAC
Certifications & Compliance	CE, RoHS, cURus (E359521)

Dimensions

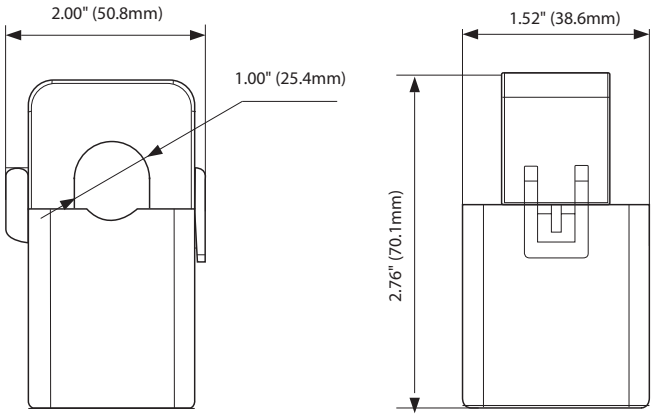

Ordering Information

	Model	-	*Rated Input*	:	*Rated Output*	-	*Frequency Bandwidth*
	AcuCT-H100		25: 25A		333mV		2K: 2kHz
			50: 50A				
Ordering Example	**AcuCT-H100**	**-**	**25**	**:**	**333mV**	**-**	**2K**