AcuCT-S113 Series

Solid-Core Current Transformer Datasheet



The superior choice for product integrations, the solid-core AcuCT S113 features five output options in a compact, durable form factor. UL2808 Listed for safety, this cost effective current transformer will provide accurate, dependable measurements across industrial, commercial, or in general energy monitoring applications.

Features

- Accuracy class: IEC 61869-2 Class 0.2
- Four current input options: 100A, 200A, 300A, or 400A
- Choose from five output options: 5A, 1A, 100mA, 80mA, 333mV
- Solid-Core design provides reliable performance in challenging applications
- UL2808 Listed and CSA C61869 compliant

Specifications

RATED CURRENT	100A, 200A, 300A, 400A
Current Range	5-120% of Rated Current RMS
Output	5A, 1A, 100mA, 80mA, 333mV
Accuracy	IEC 61869-2 Class 0.2
MECHANICAL/ENVIRONMENTAL	
Form Factor	Solid-Core CT
Window Size	30.0mm (1.20")
Exterior Dimensions	60.5mm x 68.0mm x 24.5mm 2.38" x 2.68" x 0.96"
Case Material	UL 94V-0
Lead Wire	2.5m (8.2ft), 18AWG UL1015
Weight	177.00g (6.24oz)
Operating Temperature	-25°C to 70°C / -13°F to 158°F
Storage Temperature	-40°C to 80°C / -40°F to 176°F
Operating Humidity	<90% RH
Installation Conditions	Indoor Use
ELECTRICAL	
Wire Polarity	White=Positive, Black=Negative
Phase Orientation	H1 Points Towards Source
Frequency Range	50/60Hz
Burden	10Ω @mA Output, 1.5VA@1A, 2.5VA@5A
Withstand Voltage	3.0kV / 1mA / 1min
Basic Impulse Insulation Level (BIL)	10kV
RF	1.2In
Insulation Resistance	500V/100MΩ Min
Rated Continuous Thermal Current (I_{cth})	120% of Rated Current
SAFETY/COMPLIANCE	
Rated Voltage	600VAC, Rated CAT III
Certifications & Compliance	CE, RoHS, UL 2808 Listed (E469633), CAN/CSA-C61869-1/-2, CSA C22.2

Dimensions

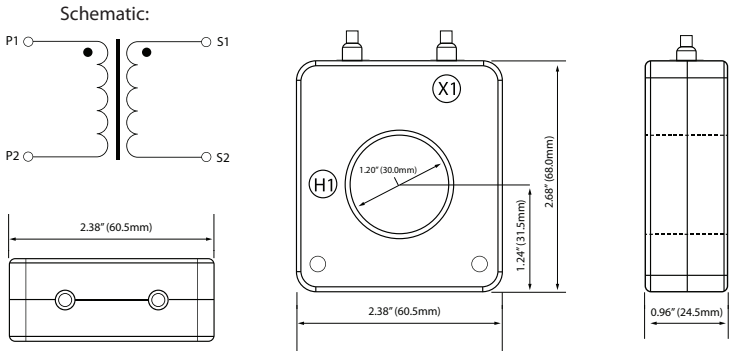

Typical Parameters				
MODEL	**CURRENT RATIO**	**ACCURACY**	**BURDEN/RESISTANCE**	**LEAD LENGTH**
AcuCT-S113-200: 80mA	200/80mA	IEC 61869-2 Class 0.2	10Ω	2.5m
AcuCT-S113-300: 80mA	300/80mA	IEC 61869-2 Class 0.2	10Ω	2.5m
AcuCT-S113-400: 80mA	400/80mA	IEC 61869-2 Class 0.2	10Ω	2.5m
AcuCT-S113-200: 100mA	200/100mA	IEC 61869-2 Class 0.2	10Ω	2.5m
AcuCT-S113-300: 100mA	300/100mA	IEC 61869-2 Class 0.2	10Ω	2.5m
AcuCT-S113-400: 100mA	400/100mA	IEC 61869-2 Class 0.2	10Ω	2.5m
AcuCT-S113-200: 333mV	200/333mV	IEC 61869-2 Class 0.2		2.5m
AcuCT-S113-300: 333mV	300/333mV	IEC 61869-2 Class 0.2		2.5m
AcuCT-S113-400: 333mV	400/333mV	IEC 61869-2 Class 0.2		2.5m
AcuCT-S113-200: 1A	200/1A	IEC 61869-2 Class 0.5	1.5VA	2.5m
AcuCT-S113-300: 1A	300/1A	IEC 61869-2 Class 0.5	1.5VA	2.5m
AcuCT-S113-400: 1A	400/1A	IEC 61869-2 Class 0.5	1.5VA	2.5m
AcuCT-S113-100: 5A	100/5A	IEC 61869-2 Class 1	2.5VA	2.5m
AcuCT-S113-200: 5A	200/5A	IEC 61869-2 Class 1	2.5VA	2.5m
AcuCT-S113-300: 5A	300/5A	IEC 61869-2 Class 1	2.5VA	2.5m
AcuCT-S113-400: 5A	400/5A	IEC 61869-2 Class 1	2.5VA	2.5m

Mounting Brackets Accessory

Mounting accessories are available for AcuCT S series. Each mounting kit includes 2 mounting brackets (left and right), 2 mounting screws and 2 mounting nuts in the package.

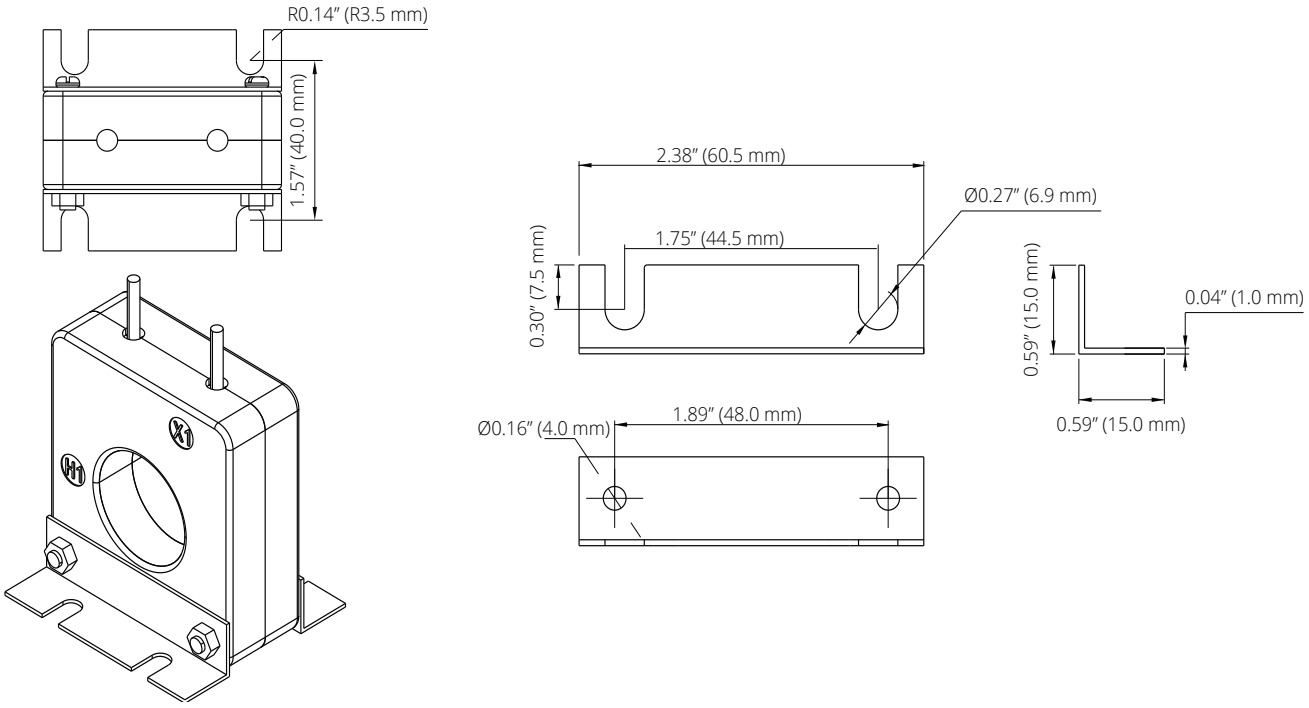

Installation Instructions

1. Our AcuCT S series CTs do not include mounting accessories by default. If required, please purchase them separately.
2. Mounting accessories are zinc-plated for effective rust protection and are attached to the CT using M4 screws.
   - Screw specification: M4 × 30 mm
   - Nut specification: M4 × 3 mm
   - Recommended tightening torque: 0.5–0.8 N·m
3. Loosen the knurled thumb screw of the CT, separate the CT in the direction of the arrow, install the CT over the primary conductor, then tighten the screw to complete installation. The design of the knurled thumb screw enables quick installation without the need for tools.
4. The primary conductor cable is threaded into CT from side H1, with the white wire being positive lead and the black wire being negative lead.

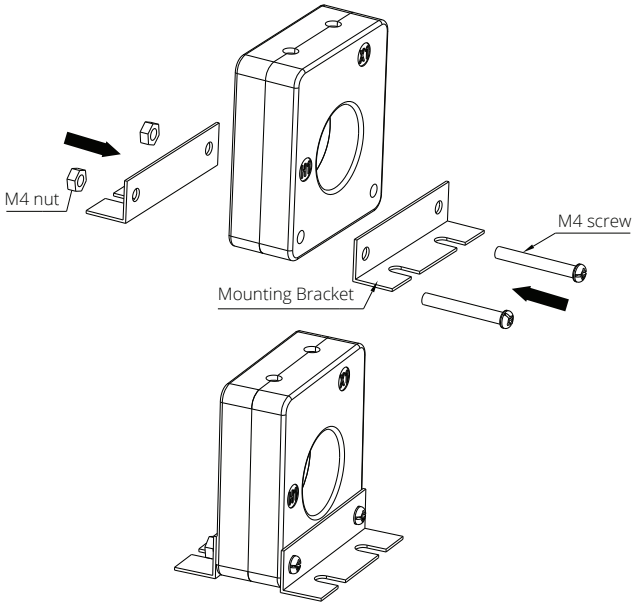

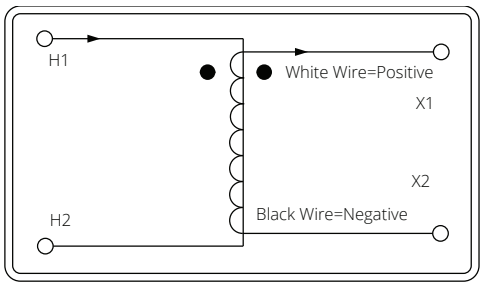

Ordering Information

	Model	-	*Rated Input*	:	*Rated Output*
	AcuCT-S113		200: 200A		333mV
			300: 300A		80mA
			400: 400A		100mA
					1A
					5A
Ordering Example	**AcuCT-S113**		**200**	**:**	**333mV**

	Model	-	*Rated Input*	:	*Rated Output*
	AcuCT-S113		100: 100A		5A
Ordering Example	**AcuCT-S113**	**-**	**100**	**:**	**5A**

+ **Accessory *(Optional)***	
Model	*Accessory*
ACUBRAC	S1
Ordering Example	**ACUBRAC - S1**

Mod-Tronic Instruments Ltd.
1-800-794-5883
www.mod-tronic.com
sales@mod-tronic.com

Revision Date: October 2026 Version: 1.1.0
Specs Subject To Change Without Notice.