AcuCT S125 Series

Solid-Core Current Transformer Datasheet



Built with epoxy encapsulated housing for superior integrity and protection, the AcuCT S125 solid-core current transformer delivers 0.2% measurement accuracy, ideal for revenue-grade billing applications when paired with high precision energy meters. Available in a wide range of rated current options from 50A to 400A, it is suitable for a wide range of applications across commercial and industrial sectors.

Features

- Accuracy class: 0.2
- Current Inputs: 50A, 100A, 200A, 300A, 400A
- Output Options: 5A, 1A, 80mA, 100mA, 333mV

Specifications

RATED CURRENT	50A, 100A, 200A, 300A, 400A
Current Range	5%-120% of Rated Current
Output	5A, 1A, 80mA, 100mA, 333mV
Accuracy	IEC 61869-2 Class 0.2
MECHANICAL/ENVIRONMENTAL	
Exterior Dimensions	120mm x 100mm x 70mm 4.72" x 3.94" x 2.76"
Window Size	Ø 32.0mm (1.26")
Case Material	Epoxy Encapsulated Housing
Operating Temperature	-25°C to 70°C / -13°F to 158°F
Storage Temperature	-40°C to 80°C / -40°F to 176°F
Operating Humidity	<90% RH
Lead Wires	2.5m (8ft) Twisted Pair, 18AWG
Installation Conditions	Indoor Use
ELECTRICAL	
Wire Polarity	White=Positive, Black=Negative
Phase Orientation	H1 Points Towards Source
Frequency Range	50/60Hz
Burden	80,100mA: 10Ω / 1A: 1.5VA / 5A: 2.5VA
Insulation Resistance	500V/100MΩ Min
Rated Continuous Thermal Current (I_{cth})	120% of Rated Current
SAFETY/COMPLIANCE	
Rated Voltage	600VAC, Rated CAT IV
Certifications & Compliance	CE, RoHS, UL2808 Listed, CSA C22.2

Dimensions

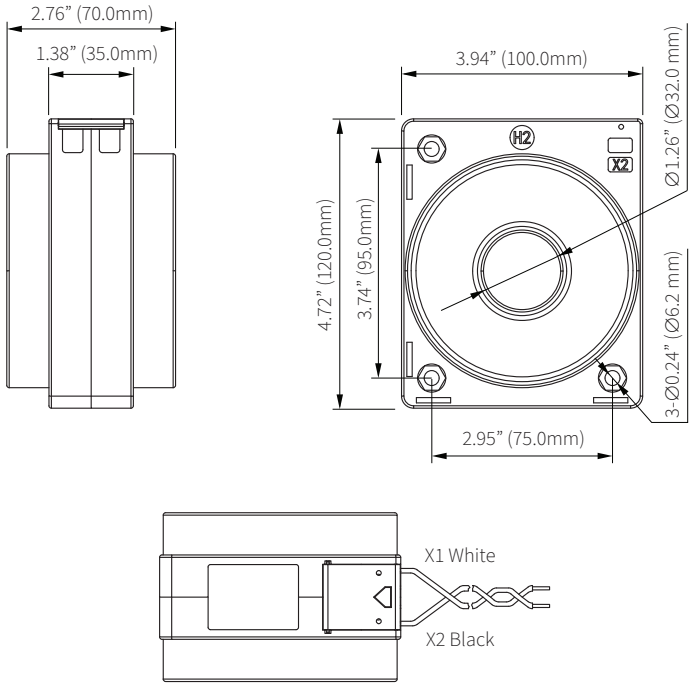

Typical Parameters

MODEL	CURRENT RATIO	ACCURACY	BURDEN/RESISTANCE	LEAD LENGTH
AcuCT-S125-50: 80mA	50/80mA	IEC 61869-2 Class 0.2	10Ω	2.5m
AcuCT-S125-100: 80mA	100/80mA	IEC 61869-2 Class 0.2	10Ω	2.5m
AcuCT-S125-200: 80mA	200/80mA	IEC 61869-2 Class 0.2	10Ω	2.5m
AcuCT-S125-300: 80mA	300/80mA	IEC 61869-2 Class 0.2	10Ω	2.5m
AcuCT-S125-400: 80mA	400/80mA	IEC 61869-2 Class 0.2	10Ω	2.5m
AcuCT-S125-50: 100mA	50/100mA	IEC 61869-2 Class 0.2	10Ω	2.5m
AcuCT-S125-100: 100mA	100/100mA	IEC 61869-2 Class 0.2	10Ω	2.5m
AcuCT-S125-200: 100mA	200/100mA	IEC 61869-2 Class 0.2	10Ω	2.5m
AcuCT-S125-300: 100mA	300/100mA	IEC 61869-2 Class 0.2	10Ω	2.5m
AcuCT-S125-400: 100mA	400/100mA	IEC 61869-2 Class 0.2	10Ω	2.5m
AcuCT-S125-50: 333mV	50/333mV	IEC 61869-2 Class 0.2		2.5m
AcuCT-S125-100: 333mV	100/333mV	IEC 61869-2 Class 0.2		2.5m
AcuCT-S125-200: 333mV	200/333mV	IEC 61869-2 Class 0.2		2.5m
AcuCT-S125-300: 333mV	300/333mV	IEC 61869-2 Class 0.2		2.5m
AcuCT-S125-400: 333mV	400/333mV	IEC 61869-2 Class 0.2		2.5m
AcuCT-S125-50: 1A	50/1A	IEC 61869-2 Class 0.2	1.5VA	2.5m
AcuCT-S125-100: 1A	100/1A	IEC 61869-2 Class 0.2	1.5VA	2.5m
AcuCT-S125-200: 1A	200/1A	IEC 61869-2 Class 0.2	1.5VA	2.5m
AcuCT-S125-300: 1A	300/1A	IEC 61869-2 Class 0.2	1.5VA	2.5m
AcuCT-S125-400: 1A	400/1A	IEC 61869-2 Class 0.2	1.5VA	2.5m
AcuCT-S125-50: 5A	50/5A	IEC 61869-2 Class 0.2	2.5VA	2.5m
AcuCT-S125-100: 5A	100/5A	IEC 61869-2 Class 0.2	2.5VA	2.5m
AcuCT-S125-200: 5A	200/5A	IEC 61869-2 Class 0.2	2.5VA	2.5m
AcuCT-S125-300: 5A	300/5A	IEC 61869-2 Class 0.2	2.5VA	2.5m
AcuCT-S125-400: 5A	400/5A	IEC 61869-2 Class 0.2	2.5VA	2.5m

Note: In addition to the recommended accuracy classes listed above, custom accuracy class configurations are also available (e.g., 0.5, 0.5S, 0.2S).

Accuracy Class 0.2

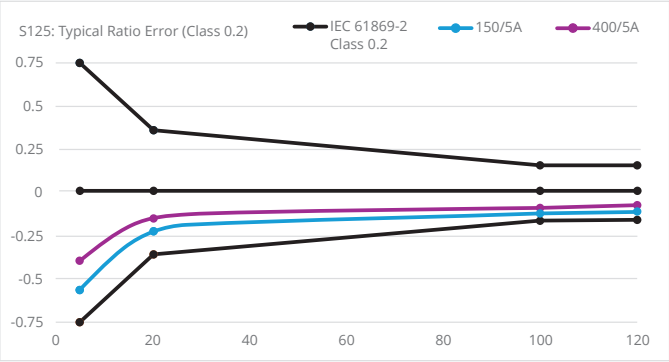

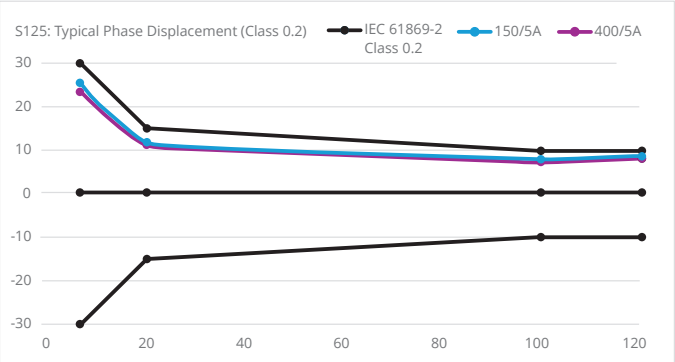

Mounting Brackets Accessory

Mounting accessories are available for AcuCT S series. Each mounting kit includes 4 mounting brackets (left and right), 2 mounting screws and 2 mounting nuts in the package.

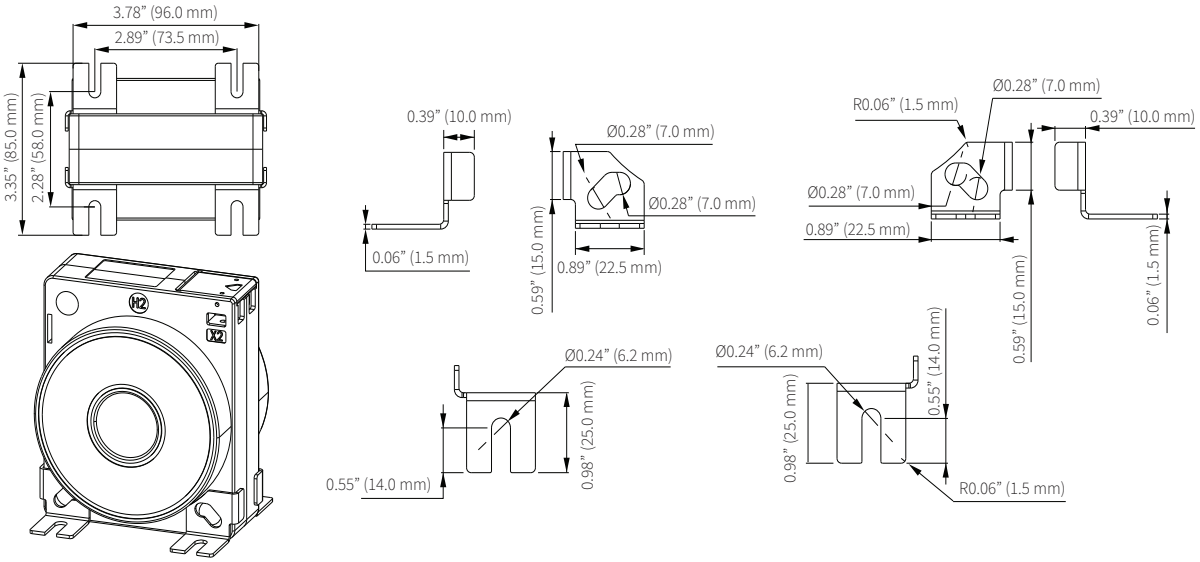

Installation Instructions

1. Our AcuCT S series CTs do not include mounting accessories by default. If required, please purchase them separately.
2. Mounting accessories are zinc-plated for effective rust protection and are attached to the CT using M6 screws.
   - Screw specification: M6 × 45 mm
   - Nut specification: M6 × 4 mm
   - Recommended tightening torque: 0.5–0.8 N·m
3. Loosen the knurled thumb screw of the CT, separate the CT in the direction of the arrow, install the CT over the primary conductor, then tighten the screw to complete installation. The design of the knurled thumb screw enables quick installation without the need for tools.
4. The primary conductor cable is threaded into CT from side H1, with the white wire being positive lead and the black wire being negative lead.

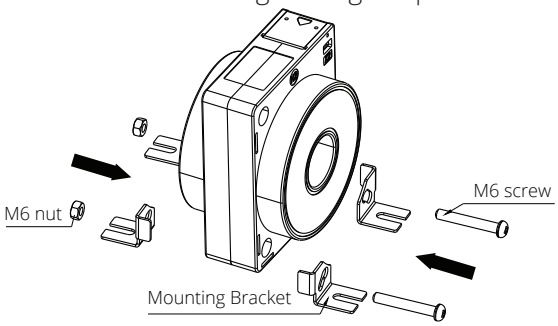

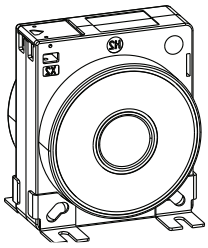

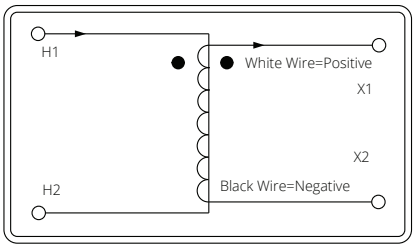

Ordering Information

	Model	Rated Input	Rated Output
	AcuCT-S125	50: 50A	5A
		100: 100A	1A
		200: 200A	100mA
		300: 300A	80mA
		400: 400A	333mV
Ordering Example	**AcuCT-S125**	**-** **200**	**:** **333mV**

+ **Accessory *(Optional)***	
Model	*Accessory*
ACUBRAC	S3
Ordering Example	**ACUBRAC - S3**

Mod-Tronic Instruments Ltd.
Brampton, Ontario, Canada
Tel: 1-800-794-5883
Web: www.mod-tronic.com
Email: sales@mod-tronic.com

Revision Date: September 2026 Version: 1.0.5
Specs Subject To Change Without Notice.