AcuCT S165 Series

Solid-Core Current Transformer Datasheet



The AcuCT S165 solid-core current transformer delivers up to IEC 61869-2 Class 0.2 measurement accuracy at 5% to 120% rated current making it ideal for revenue-grade billing and load management solutions when paired with high-precision energy meters. Available in a wide range of rated current input options, from 100A to 1200A, as well as current output options, covering a wide range of applications across both commercial and industrial sectors.

Features

- Accuracy class: 0.2
- Current Input Options: 100A, 200A, 300A, 400A, 500A, 600A, 800A, 1000A, 1200A
- Current Output Options: 5A, 1A, 100mA, 80mA, 333mV

Specifications

RATED CURRENT	100A, 200A, 300A, 400A, 500A, 600A, 800A, 1000A, 1200A
Current Range	5%-120% of Rated Current
Output	5A, 1A, 100mA, 80mA, 333mV
Accuracy	IEC 61869-2 Class 0.2
MECHANICAL/ENVIRONMENTAL	
Exterior Dimensions	83mm x 96mm x 45mm 3.27" x 3.78" x 1.77"
Window Size	Ø 42.0mm (1.65")
Case Material	Epoxy Encapsulated Housing
Operating Temperature	-25°C to 70°C / -13°F to 158°F
Storage Temperature	-40°C to 80°C / -40°F to 176°F
Operating Humidity	Non-Condensing, 5% to 95% RH
Lead Wires	2.5m (8ft) Twisted Pair, 18AWG
Installation Conditions	Indoor Use
ELECTRICAL	
Wire Polarity	White=Positive (X1), Black=Negative (X2)
Phase Orientation	H1 Points Towards Source
Frequency Range	50/60Hz
Burden	1.5-5VA@1/5A; 10Ω@mA
Insulation Resistance	500V / 100MΩ Min
Rated Voltage	600VAC, Rated CAT IV
Rated Continuous Thermal Current (I_{cth})	120% of Rated Current
SAFETY/COMPLIANCE	
Certifications & Compliance	CE, RoHS, UL 2808 Listed, CAN/CSA-C61869-1/-2, CSA C22.2

Dimensions

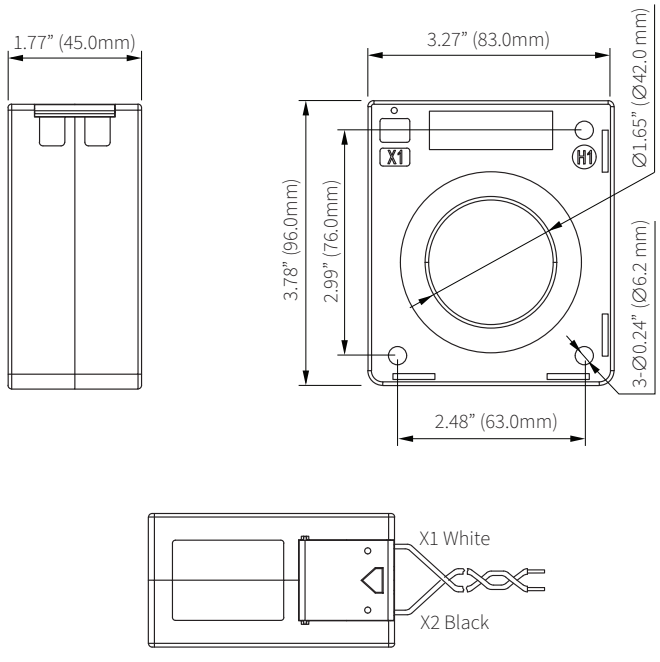

Typical Parameters

MODEL	CURRENT RATIO	ACCURACY	BURDEN/RESISTANCE	LEAD LENGTH
AcuCT-S165-100: 80mA	100/80mA	IEC 61869-2 Class 0.2	10Ω	2.5m
AcuCT-S165-200: 80mA	200/80mA	IEC 61869-2 Class 0.2	10Ω	2.5m
AcuCT-S165-300: 80mA	300/80mA	IEC 61869-2 Class 0.2	10Ω	2.5m
AcuCT-S165-400: 80mA	400/80mA	IEC 61869-2 Class 0.2	10Ω	2.5m
AcuCT-S165-500: 80mA	500/80mA	IEC 61869-2 Class 0.2	10Ω	2.5m
AcuCT-S165-600: 80mA	600/80mA	IEC 61869-2 Class 0.2	10Ω	2.5m
AcuCT-S165-800: 80mA	800/80mA	IEC 61869-2 Class 0.2	10Ω	2.5m
AcuCT-S165-1000: 80mA	1000/80mA	IEC 61869-2 Class 0.2	10Ω	2.5m
AcuCT-S165-1200: 80mA	1200/80mA	IEC 61869-2 Class 0.2	10Ω	2.5m
AcuCT-S165-100: 100mA	100/100mA	IEC 61869-2 Class 0.2	10Ω	2.5m
AcuCT-S165-200: 100mA	200/100mA	IEC 61869-2 Class 0.2	10Ω	2.5m
AcuCT-S165-300: 100mA	300/100mA	IEC 61869-2 Class 0.2	10Ω	2.5m
AcuCT-S165-400: 100mA	400/100mA	IEC 61869-2 Class 0.2	10Ω	2.5m
AcuCT-S165-500: 100mA	500/100mA	IEC 61869-2 Class 0.2	10Ω	2.5m
AcuCT-S165-600: 100mA	600/100mA	IEC 61869-2 Class 0.2	10Ω	2.5m
AcuCT-S165-800: 100mA	800/100mA	IEC 61869-2 Class 0.2	10Ω	2.5m
AcuCT-S165-1000: 100mA	1000/100mA	IEC 61869-2 Class 0.2	10Ω	2.5m
AcuCT-S165-1200: 100mA	1200/100mA	IEC 61869-2 Class 0.2	10Ω	2.5m
AcuCT-S165-100: 333mV	100/333mV	IEC 61869-2 Class 0.2		2.5m
AcuCT-S165-200: 333mV	200/333mV	IEC 61869-2 Class 0.2		2.5m
AcuCT-S165-300: 333mV	300/333mV	IEC 61869-2 Class 0.2		2.5m
AcuCT-S165-400: 333mV	400/333mV	IEC 61869-2 Class 0.2		2.5m
AcuCT-S165-500: 333mV	500/333mV	IEC 61869-2 Class 0.2		2.5m
AcuCT-S165-600: 333mV	600/333mV	IEC 61869-2 Class 0.2		2.5m
AcuCT-S165-800: 333mV	800/333mV	IEC 61869-2 Class 0.2		2.5m
AcuCT-S165-1000: 333mV	1000/333mV	IEC 61869-2 Class 0.2		2.5m
AcuCT-S165-1200: 333mV	1200/333mV	IEC 61869-2 Class 0.2		2.5m
AcuCT-S165-100: 1A	100/1A	IEC 61869-2 Class 0.2	1.5VA	2.5m
AcuCT-S165-200: 1A	200/1A	IEC 61869-2 Class 0.2	1.5VA	2.5m
AcuCT-S165-300: 1A	300/1A	IEC 61869-2 Class 0.2	1.5VA	2.5m
AcuCT-S165-400: 1A	400/1A	IEC 61869-2 Class 0.2	1.5VA	2.5m
AcuCT-S165-500: 1A	500/1A	IEC 61869-2 Class 0.2	2.5VA	2.5m
AcuCT-S165-600: 1A	600/1A	IEC 61869-2 Class 0.2	2.5VA	2.5m
AcuCT-S165-800: 1A	800/1A	IEC 61869-2 Class 0.2	3.75VA	2.5m
AcuCT-S165-1000: 1A	1000/1A	IEC 61869-2 Class 0.2	5VA	2.5m
AcuCT-S165-1200: 1A	1200/1A	IEC 61869-2 Class 0.2	5VA	2.5m
AcuCT-S165-100: 5A	100/5A	IEC 61869-2 Class 0.2	2.5VA	2.5m
AcuCT-S165-200: 5A	200/5A	IEC 61869-2 Class 0.2	2.5VA	2.5m
AcuCT-S165-300: 5A	300/5A	IEC 61869-2 Class 0.2	2.5VA	2.5m
AcuCT-S165-400: 5A	400/5A	IEC 61869-2 Class 0.2	2.5VA	2.5m
AcuCT-S165-500: 5A	500/5A	IEC 61869-2 Class 0.2	2.5VA	2.5m
AcuCT-S165-600: 5A	600/5A	IEC 61869-2 Class 0.2	2.5VA	2.5m
AcuCT-S165-800: 5A	800/5A	IEC 61869-2 Class 0.2	3.75VA	2.5m
AcuCT-S165-1000: 5A	1000/5A	IEC 61869-2 Class 0.2	5VA	2.5m
AcuCT-S165-1200: 5A	1200/5A	IEC 61869-2 Class 0.2	5VA	2.5m

Note: In addition to the recommended accuracy classes listed above, custom accuracy class configurations are also available (e.g., 0.5, 0.5S, 0.2S).

IEC 61869-2 0.2 Compliance

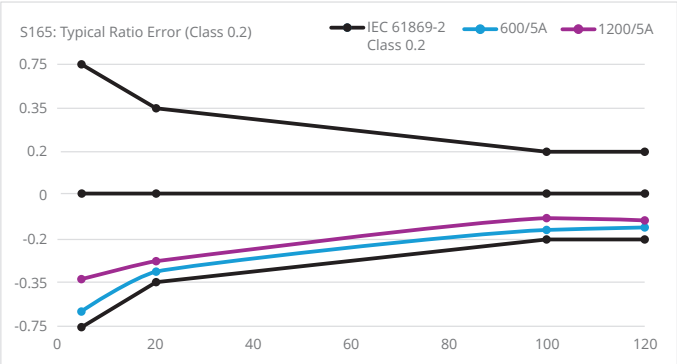

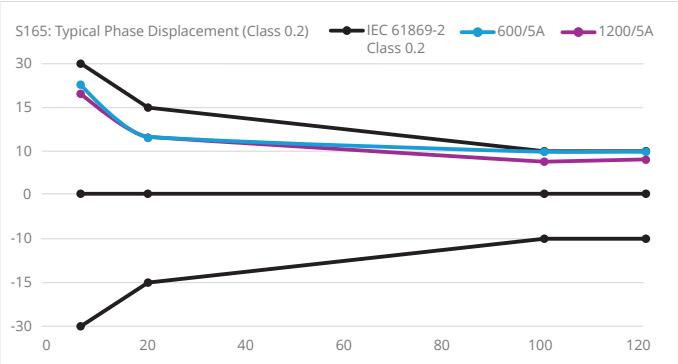

Mounting Brackets Accessory

Mounting accessories are available for AcuCT S series. Each mounting kit includes 4 mounting brackets (left and right), 2 mounting screws and 2 mounting nuts in the package.

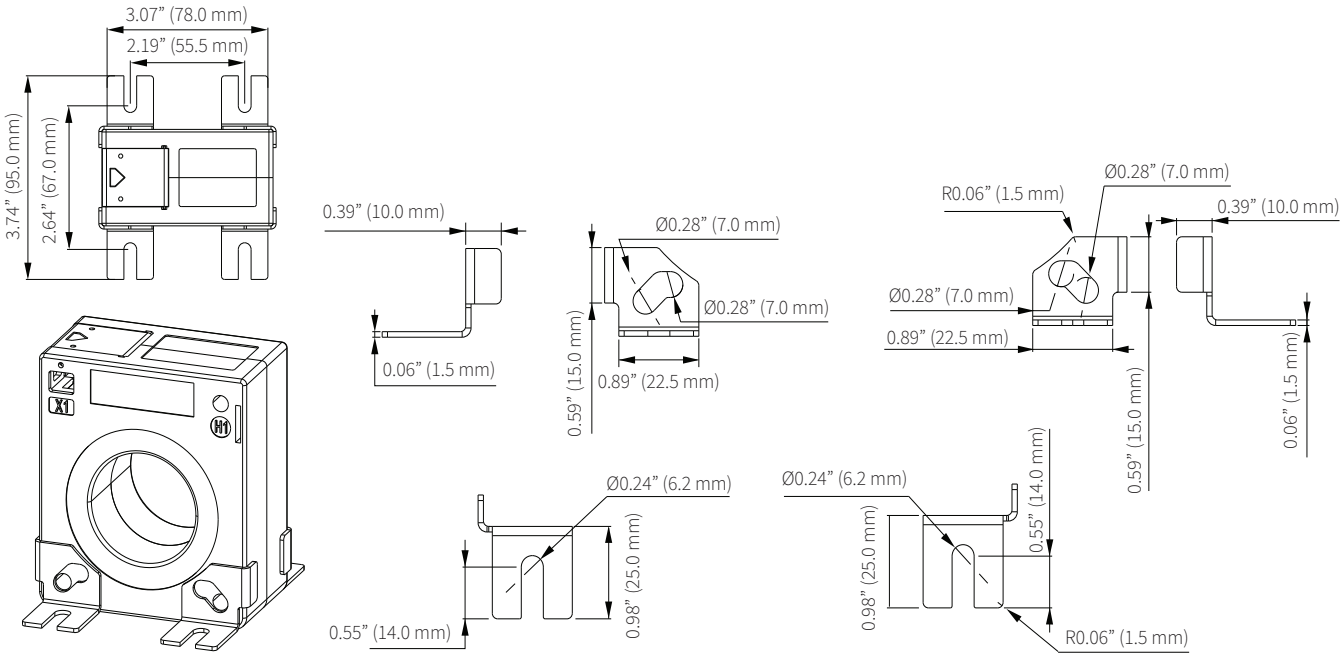

Installation Instructions

1. Our AcuCT S series CTs do not include mounting accessories by default. If required, please purchase them separately.
2. Mounting accessories are zinc-plated for effective rust protection and are attached to the CT using M6 screws.
   - Screw specification: M6 × 55 mm
   - Nut specification: M6 × 4 mm
   - Recommended tightening torque: 0.5–0.8 N·m

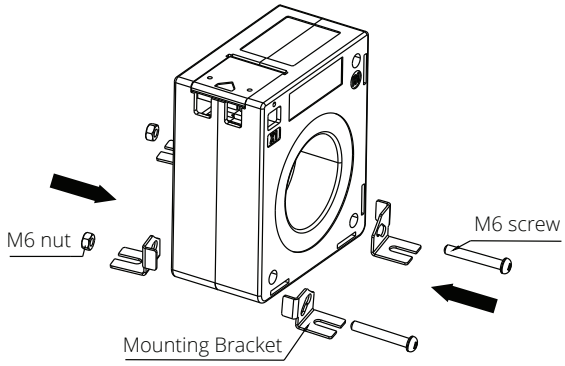

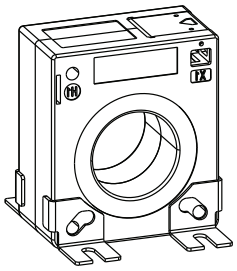

3. In addition to the above installation methods, rail mounting is also supported. The rail can be clipped into the slot on the housing, suitable for 35 mm DIN rails.
4. The primary conductor cable is threaded into CT from side H1, with the white wire being positive lead and the black wire being negative lead.

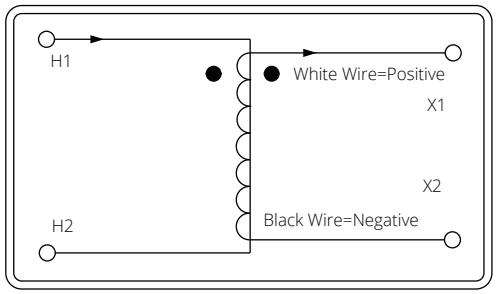

Ordering Information

	Model	Rated Input	Rated Output
	AcuCT-S165	100: 100A	5A
		200: 200A	1A
		300: 300A	100mA
		400: 400A	80mA
		500: 500A	333mV
		600: 600A	
		800: 800A	
		1000: 1000A	
		1200: 1200A	
Ordering Example	**AcuCT-S165**	**-** **800**	**:** **333mV**

\+

Accessory *(Optional)*		
Model	*Accessory*	*Mounting Options*
ACUBRAC	S4	Blank – Screw Mounting
		DIN – DIN Rail Mounting
Ordering Example	**ACUBRAC - S4**	
	ACUBRAC - S4 - DIN	

Mod-Tronic Instruments Ltd.
1-800-794-5883
www.mod-tronic.com
sales@mod-tronic.com

Revision Date: September 2026 Version: 1.0.4
Specs Subject To Change Without Notice.