AcuCT S Series

Solid-Core Current Transformer Installation Guide

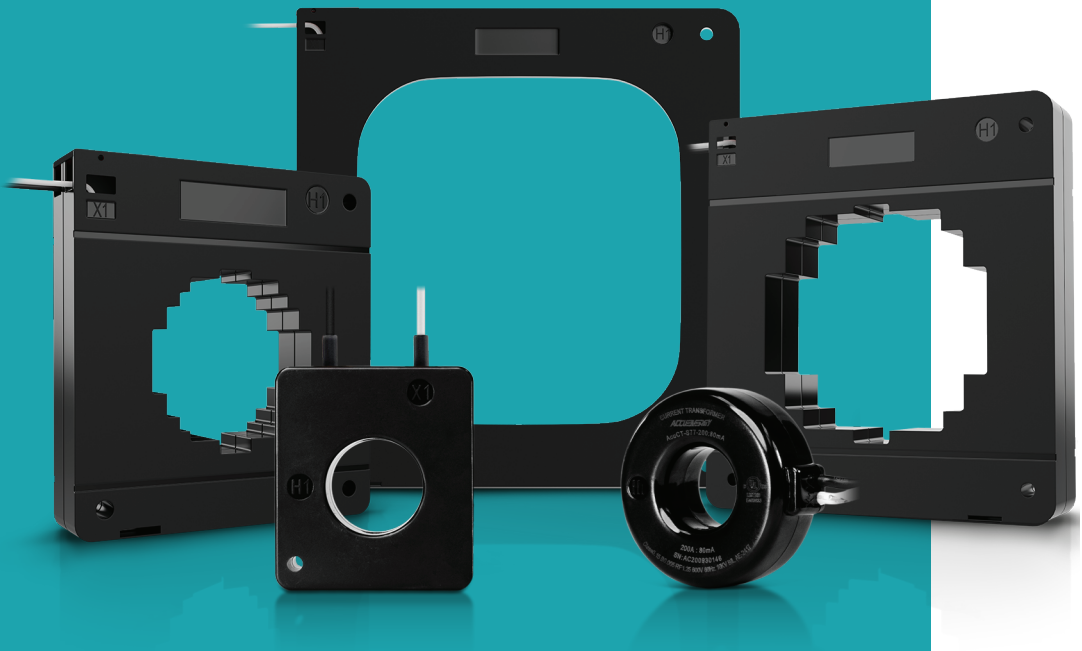

c UL us CE RoHS COMPLIANT

ACCUENERGY

Copyright © 2026 v1.0.2

All Accuenergy brands and trademarks in this document are the property of Accuenergy Inc. All other brands and trademarks may be the property of the respective owners of these rights.

This instruction may not be altered, copied or reproduced in whole or in part by any means without the expressed written consent of Accuenergy.

Please read this installation guide carefully before installation, operation, and maintenance of the AcuCT S Series current transformers.

The information contained in this document is believed to be accurate at the time of publication, however, Accuenergy assumes no responsibility for any errors which may appear here and reserves the right to make changes without prior notice as part of continuing improvements. Please ask the local representative for the latest product specifications before ordering.

The following symbols appear throughout this documentation and on the AcuCT S Series, in addition to the electrical warning of danger or safety risk during the installation and operation of the current transformers.



Electrical Shock Hazard: Contains information about procedures which must be followed to prevent the risk of electric shock and danger that can result in personal injury or death.



Safety Warning: Contains information about circumstances which if not considered may result in personal injury or death.



Info: An advance notice to provide additional information before an action is taken by the user.

Installation and maintenance of the AcuCT S Series shall only be performed by qualified, competent professionals who have received training and have experience with high voltage and current devices.

Accuenergy shall not be responsible or liable for any damage caused by improper installation and/or operation.

Table of Contents

Safety and Critical Handling Requirements 5

- Current Transformer Installation Safety 5
- Installation Requirements and Operating Limits 6
- Pre-Installation Safety Checks 6

Introduction 7

- Overview 7

CT Orientation, Polarity, and Wiring Identification 8

Recommended Installation Tools and Materials 9

CT Mounting Procedure 10

- Solid-Core CT Installation 11
- Mounting Bracket Installation 11
- DIN Rail Installation 13

Warnings and Installation Considerations 15

- Incorrect Installation Risk 15
- Common Installation Errors 15

Best Practices 16

- Accuracy Optimization 16
- Wiring Practices 16
- Installation Consistency 16

Commissioning Checklist 17

Safety and Critical Handling Requirements



Electrical Hazard

Do Not Leave the 1A or 5A Secondary Current Transformer Circuit Open on Energized Conductors.

CTs with **1 A or 5 A** secondary output have **no open-circuit protection.** The secondary must be short-circuited before installation and must remain shorted or connected to a compatible meter / relay input whenever the primary conductor is energized. An open secondary can develop hazardous voltage and may damage equipment or create a shock hazard.

For **80 mA, 100 mA, and 333 mV** output of the CTs include TVS diode as an open-circuit protection; shorting the secondary is not required. However, terminate the leads correctly regardless of output type.

Current Transformer Installation Safety

- De-energize the primary conductor whenever possible before installing, removing, or repositioning the CT.
- Use lockout / tagout, arc-flash PPE, and required safety controls for the enclosure type and voltage class.
- Confirm CT rated voltage, current ratio, secondary output type, burden / resistance, and environmental ratings are suitable for the installation.
- Inspect the CT before installation. Do not use a CT with cracked housing, damaged lead wires, loose mounting hardware, contaminated surfaces, or signs of overheating.
- Ensure the maximum current of the conductor does not exceed the rated current of the CT.
- Install indoors only unless the datasheet for the exact model and configuration states otherwise.
- Do not modify the CT housing, mounting holes, lead wires, and insulation system.
- Ensure CTs installed around conductors do not occupy more than 75% of the available wiring space cross-sectional area, in accordance with applicable electrical codes.

Installation Requirements and Operating Limits

Parameter	Specifications	Operating Limits
Rated Voltage	600VAC	Do not use above approved circuit voltage rating.
Measurement Category	CAT III or CAT IV	Verify the model with the product datasheet before installation.
Frequency Range	50 / 60 Hz; 50 - 400 Hz for AcuCT-S433 Series	Confirm the frequency of the monitored system is within the range of the model.
Operating Temperature	-25°C to 70°C (-13°F to 158°F); -25°C to 80°C (-13°F to 176°F) for AcuCT-S77 Series	Confirm ambient conditions inside the enclosure.
Operating Humidity	Less than 90% RH; 5% to 95% RH, Non-Condensing for AcuCT-S77 Series and AcuCT S165 Series	Prevent condensation and water ingress.
Current Range	5% to 120% of Rated Current; 10% to 120% of Rated Current for AcuCT-S77 Series	Select CT ratio that matches expected operating current.
Secondary Output	5A, 1A, 100mA, 80mA, or 333mV, depending on model.	Use only with compatible meter inputs and ratio settings.

Pre-Installation Safety Checks

Condition	Current Transformer Secondary Output	
	1 A and 5 A	80 mA, 100 mA, 333 mV
Open-Circuit Risk	High open-circuit risk. Do not leave the secondary circuit open while primary current is flowing.	Low open-circuit risk. Proper wiring and termination is recommended.
Shorting Requirement	Yes. Short the secondary before installation, and any time when the meter is disconnected while the primary is energized.	No. Follow the wiring instructions provided by the manufacturer of the meter.
Installation Priority	Terminate the secondary leads to the meter or a shorting block before energizing the primary conductor.	Terminate the secondary leads to the meter before or during installation to avoid wiring errors.

Introduction

Overview

The AcuCT S Series is solid-core current transformers designed for energy and power metering applications. Typical installation is required at locations where the primary conductor or busbar can be routed through the CT window. Depending on the model, the AcuCT S series supports secondary output of either current or voltage options.

Model	Rated Primary Current Options	Rated Secondary Output Options	Window Size	Exterior Dimensions	Optional Mounting Kit
AcuCT-S77 Series	100A, 200A	80mA, 100mA, 333mV	Ø19.6mm (0.77″)	51.0mm x 19.0mm (2.00″ x 0.75″)	Cable Tie / Conductor Support
AcuCT-S113 Series	100A, 200A, 300A, 400A	5A, 1A, 100mA, 80mA, 333mV	Ø30.0mm (1.20″)	60.5mm x 68.0mm x 24.5mm (2.38″ x 2.68″ x 0.96″)	ACUBRAC-S1
AcuCT S125 Series	50A, 100A, 200A, 300A, 400A	5A, 1A, 100mA, 80mA, 333mV	Ø32.0mm (1.26″)	120mm x 100mm x 70mm (4.72″ x 3.94″ x 2.76″)	ACUBRAC-S3
AcuCT S165 Series	100A, 200A, 300A, 400A, 500A, 600A, 800A, 1000A, 1200A	5A, 1A, 100mA, 80mA, 333mV	Ø42.0mm (1.65")	83mm x 96mm x 45 mm (3.27″ x 3.78″ x 1.77″)	ACUBRAC-S4 / ACUBRAC-S4-DIN
AcuCT-S220 Series	200A, 250A, 300A, 400A, 500A, 600A, 800A, 1000A, 1200A, 1500A	5A, 1A, 100mA, 80mA, 333mV	Ø57.0mm (2.24″)	115mm x 125mm x 32mm (4.53″ x 4.92″ x 1.26″)	ACUBRAC-S2
AcuCT-S335 Series	500A, 600A, 800A, 1000A, 1200A, 1500A, 2000A, 2500A, 3000A, 3500A	5A, 1A, 100mA, 80mA, 333mV	Ø72.0mm (2.83″)	146mm x 156mm x 32mm (5.75″ x 6.14″ x 1.26″)	ACUBRAC-S2
AcuCT-S433 Series	800A, 1000A, 1200A, 1500A, 2000A, 2500A, 3000A, 3500A, 4000A	5A, 1A, 100mA, 80mA, 333mV	Ø93.0mm (3.66″)	165mm x 175mm x 35mm (6.50″ x 6.89″ x 1.38″)	ACUBRAC-S3
AcuCT-S650 Series	800A, 1000A, 1200A, 1500A, 2000A, 2500A, 3000A, 3500A, 4000A	5A, 1A, 100mA, 80mA, 333mV	160mm x 160mm (6.30″ x 6.30″)	220mm x 230mm x 35mm (8.66″ x 9.06″ x 1.38″)	ACUBRAC-S3

CT Orientation, Polarity, and Wiring Identification

Proper orientation is required for positive real power measurement, correct power factor sign, and correct phase relationship between current and voltage inputs.

Info

CT Polarity Should Not be Inferred.
If commissioning shows negative power, reversed power factor, or incorrect phase angle, verify CT orientation and voltage phase assignment. Swap X1/X2 or reverse the CT after confirming the wiring diagram and metering configuration.

Markings	Installation Instructions
H1 / Source Side	Primary conductor or busbar enters from the H1 side. H1 should face the source side of the circuit as depicted in Figure 1.
H2 / Load Side	Primary conductor exits towards the H2 or load side. Maintain consistent orientation from the other phase as well.
X1 / Positive Secondary	White lead should be connected to the positive / high CT input of the meter or relay.
X2 / Negative Secondary	Black lead should be connected to the negative / return CT input of the meter or relay.
Single Phase Conductor	Install one current transformer around single phase conductor only. Do not pass multiple phase conductors through the same CT.
Lead Routing	Route the leads of the CT away from sharp edges, moving parts, hot surfaces, and high-noise conductors. Keep secondary wiring as short as practically possible.

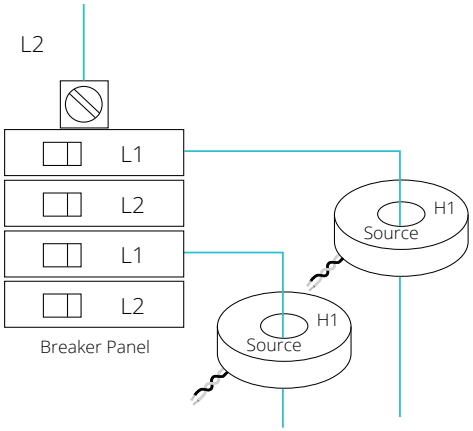

Figure 1 AcuCT-S77 Series Installation with H1 Facing the Source

Recommended Installation Tools and Materials

- Use appropriate insulated hand tools for the enclosure and voltage class.
- Approved CT shorting block or shorting terminal for 1A and 5A output models.
- Cable ties or clamps should be used for secondary lead strain relief and conductor support for AcuCT-S77 Series.
- Mounting brackets, DIN rail hardware, panel screws, nuts, and washers as required by the selected mounting method.
- Multimeter and commissioning meter or software for final verification.

CT Mounting Procedure

AcuCT S Series mounting accessories are not included and must be ordered separately as per requirement. Mounting nuts and screws for attaching the brackets to the CT are included in purchase. Mounting brackets are used to secure the CT to a panel, backplate, or support surface.

Model	Bracket-to-CT Hardware	Installation Notes
AcuCT-S77 Series	No Mounting Plate or Bracket Required	Secure to the conductor using a cable tie or approved support.
AcuCT-S113 Series	2 pcs of M4 X 30 mm Screw with 2 pcs of M4 X 3 mm Nut	Use one left bracket and one right bracket as depicted in Figure 2. Recommended bracket torque is 0.5-0.8 N.m.
AcuCT S125 Series	2 pcs of M6 X 45 mm Screw with 2 pcs of M6 X 4 mm Nut	Supports Mounting Brackets. Recommended bracket torque is 0.5-0.8 N.m.
AcuCT S165 Series	2 pcs of M6 X 55 mm Screw with 2 pcs of M6 X 4 mm Nut	Supports Mounting Brackets and 35 mm DIN rail mounting. Recommended bracket torque is 0.5-0.8 N.m.
AcuCT-S220 Series / AcuCT-S335 Series	2pcs of M6 X 40 mm Screw with 2pcs of M6 X 4 mm Nut	Supports Mounting Brackets. Recommended bracket torque is 0.5-0.8 N.m.
AcuCT-S433 Series / AcuCT-S650 Series	2pcs of M6 X 45 mm Screw with 2pcs of M6 X 4 mm Nut	Supports Mounting Brackets. Recommended bracket torque is 0.5-0.8 N.m.

Figures 2 and 3 depict the different mounting brackets for AcuCT-S113 and AcuCT S125 Series.

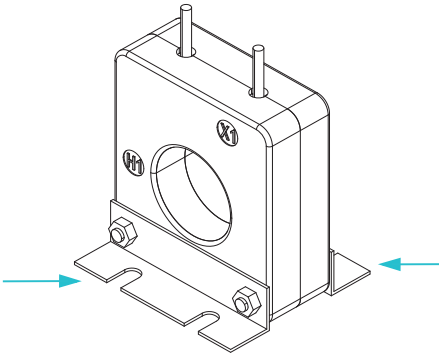

Figure 2 AcuCT-S113 Mounting Brackets

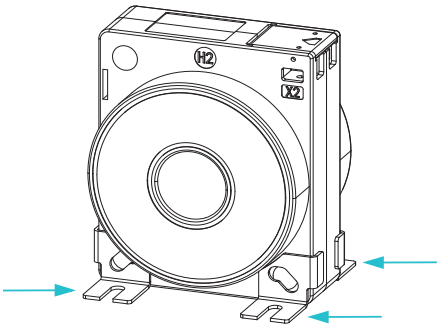

Figure 3 Mounting Brackets for AcuCT S125 Series

Solid-Core CT Installation

Step 1: System Preparation

De-energize the circuit where possible, apply lockout / tagout, and verify absence of voltage according to the site procedures.

Step 2: Verify CT and Conductor

Before routing the conductor, confirm the following against the ordered CT and the meter configuration:

1. CT model and primary current rating.
2. Secondary output rating: 1 A, 5 A, 80 mA, 100 mA, or 333 mV.
3. Conductor phase and direction of current flow so that H1 faces the source.
4. The conductor must pass through the window without force and must not occupy more than 75% of the available wiring space cross-sectional area.

For 1 A and 5 A output models, short-circuit the CT secondary with a shorting block or connect to the terminal before proceeding further.

The AcuCT S Series is solid-core current transformer, so the primary conductor must be disconnected at one end and threaded through the CT window. In existing panels, safely disconnect the conductor before installing the CT.

Step 3: Connect CT Secondary Leads

Connect the CT secondary leads to the appropriate CT terminals on the meter or relay.

Info

Ensure proper secondary lead routing. Route CT secondary leads away from sharp edges, moving parts, high-temperature surfaces, and high-noise conductors. Avoid unnecessary lead extensions as additional lead resistance may increase burden and affect the current-output of the CT.

Mounting Bracket Installation

Step 1: Choose Panel Mounting Screws

1. The mounting base plate includes 6.2 mm elongated mounting slots.
2. The mounting slots can accommodate M5, M6 screws or bolts.
3. Use M5 or M6 mounting hardware based on site requirement or preferences.

Step 2: Attach the Mounting Brackets

1. Position the mounting brackets on the CT.
2. For AcuCT-S113 Series, install the left bracket on the left side and right bracket on the right side as depicted in Figure 4.

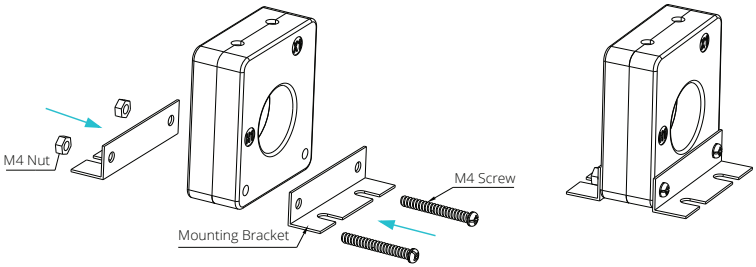

Figure 4 Mounting Brackets Installation for AcuCT-S113 Series

3. For AcuCT S125 Series, AcuCT S165 Series, AcuCT-S220 Series, AcuCT-S335 Series, AcuCT-S433 Series, and AcuCT-S650 Series, install the two left brackets on the left side and the two right brackets on the right side of the CT.
4. Fasten the brackets using screws and nuts from the mounting accessories and tighten until secure and flush, without over-tightening.

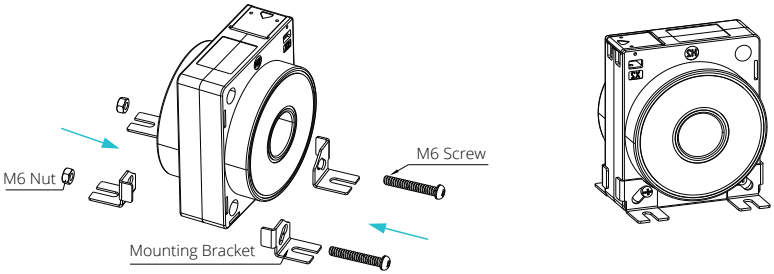

Figure 5 Mounting Brackets Installation for AcuCT S125 Series

Step 3: Panel or Backplate CT Mount

1. Place the CT with the mounting brackets onto the mounting surface and insert M5 or M6 screws through the elongated mounting slots.

2. Insert all mounting screws loosely for easy alignment as depicted in Figure 6.
3. For fine alignment, adjust the position using the elongated holes, then tighten all panel screws firmly to secure the CT.

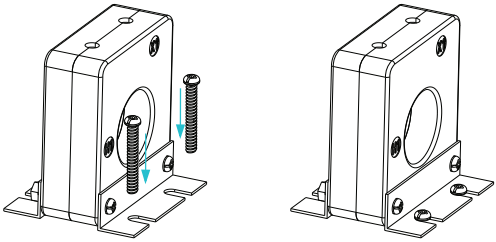

Figure 6 Mounting Screw in CT Mounted to Panel or Backplate

Step 4: Final Verification

1. Confirm the assembly is stable, flat against the surface, and does not wobble.
2. Ensure the current transformer and terminals are accessible for wiring or maintenance service.
3. Reconnect and energize the primary conductor only after the CT secondary circuit is terminated or safely shorted for 1A and 5A output models.
   If required, repeat steps 1-6 for the remaining phases.

DIN Rail Installation

The AcuCT S165 Series model supports 35 mm DIN rail mounting. The DIN rail mounting kit is not included by default with the CT and should be ordered separately.

1. Clip the current transformer to the DIN rail slot on the housing and confirm it is fully seated, stable, and accessible for wiring and service, as depicted in Figure 7.

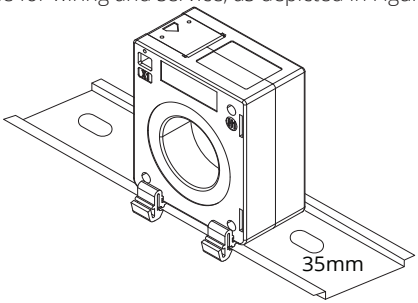

Figure 7 DIN Rail Mounting for AcuCT S165 Series

Safety Warning

Avoid mechanical stress. The CT must not carry the weight of unsupported busbars or cables. Provide independent mechanical support for the conductor or busbar where required. Excess mechanical stress may loosen connections, cause insulation damage, or result in conductor movement under fault conditions, which can lead to electric shock or arc-flash.

Info

For normal metering, install each CT around only one phase conductor. Routing the supply and return conductors, or multiple different phases, through the same current transformer can nullify or distort the measured current.

Warnings and Installation Considerations

Incorrect Installation Risk

Improper installation may result in inaccurate measurements, negative or reverse readings, reducing system reliability.

Common Installation Errors

Frequent errors observed are installing the CT backwards with incorrect polarity or simultaneously clamping the CT around multiple different phase conductors or mixing current and voltage phases. If the latch is not properly closed, it leaves the CT partially open leading to incorrect readings.

Best Practices

Accuracy Optimization

To achieve optimal performance, keep the CT core clean and fully closed. The AcuCT S Series meets accuracy specifications but place the conductor in center within the window to ensure maximum accuracy. Use cable ties to hold the CT in position and align the conductor. Maintain correct phase alignment with voltage inputs.

Wiring Practices

Route the CT secondary leads away from high-voltage conductors and avoid unnecessary lead extensions. To avoid noise interference, use twisted shielded wiring.

Installation Consistency

Maintain a consistent CT orientation across all measured phases and clearly label the CT, such as Phase A, B, C or R, Y, B. If possible, complete the wiring prior to CT installation.

Commissioning Checklist

Check	Acceptance Criteria	Result
Mechanical Installation	• CT is stable, correctly mounted, and not carrying conductor or busbar mechanical load.	Pass / Fail
Orientation	• H1 / Source side is facing the source; orientation is consistent across all phases.	Pass / Fail
Secondary Polarity	• White lead or X1 is connected to positive input of CT. • Black lead or X2 is connected to negative input of CT.	Pass / Fail
Secondary Circuit	• Current transformers with 1 A and 5 A output are terminated to the meter or safely shorted before energization.	Pass / Fail
Ratio Setting	• Meter CT ratio and output type match the CT order code.	Pass / Fail
Phase Mapping	• Current phase matches the corresponding voltage phase.	Pass / Fail
Reading Magnitude	• Measured current is reasonable for the known load condition.	Pass / Fail
Power Sign	• kW and power factor signs are correct under forward-load conditions.	Pass / Fail
Lead Strain Relief	• Secondary leads are secured, protected, and routed away from noise and heat sources.	Pass / Fail
Abnormal Condition	• No unusual heating, vibration, smell, noise, loose hardware, or unstable readings.	Pass / Fail

If commissioning results are incorrect, de-energize the circuit where possible and verify CT orientation, X1/X2 polarity, meter CT ratio, phase mapping, and meter wiring configuration before making corrections.

ACCUENERGY

MAKE ENERGY USAGE SMARTER

For additional help please reach out to:

Mod-Tronic Sales

Email: sales@mod-tronic.com

Tel: 1-800-794-5883

Mod-Tronic Technical Support

Email: sales@mod-tronic.com

Tel: 1-800-794-5883

ISO 9001, 14001 & 45001 Certified

ISO 27001 & 50001 Certified

BBB ACCREDITED BUSINESS



Mod-Tronic Instruments Ltd.

Brampton, Ontario, Canada

Tel: 1-800-794-5883

Web: www.mod-tronic.com

Revision Date: October 2026 Version: 1.0.2

Specs Subject To Change Without Notice.