AcuCT-S220 Series

Switchgear Solid-Core Current Transformer

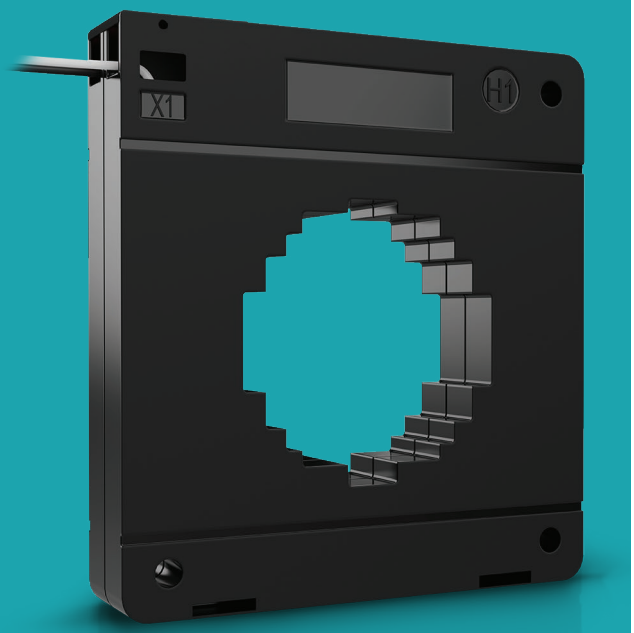

High precision solid-core current transformer for permanent installations. The AcuCT S220 features multiple input and output options in a small compact form factor. It provides consistent, reliable measurements across industrial and commercial for general metering or switchgear applications.

Features

- Accuracy class: 0.2 with a Measurement Canada approved model available at Class 0.15
- Current input options: 200A, 250A, 300A, 400A, 500A, 600A, 800A, 1000A, 1200A, 1500A
- Choose from five output options: 5A, 1A, 100mA, 80mA, 333mV

Specifications

RATED CURRENT	200A, 250A, 300A, 400A, 500A, 600A, 800A, 1000A, 1200A, 1500A
Current Range	5%-120% of Rated Current
Output	5A, 1A, 100mA, 80mA, 333mV
Accuracy	IEC 61869-2 Class 0.2 Measurement Canada Class 0.15
MECHANICAL/ENVIRONMENTAL	
Form Factor	Solid-Core CT
Window Size	Ø 57.0 mm (2.24″)
Exterior Dimensions	115.0mm x 125.0mm x 32.0mm 4.53″ x 4.92″ x 1.26″
Case Material	Epoxy Encapsulated Housing
Lead Wires	2.5m (8ft), Twisted Pair, 18AWG
Operating Temperature	-25°C to 70°C / -13°F to 158°F
Storage Temperature	-40°C to 80°C / -40°F to 176°F
Operating Humidity	<90% RH
Installation Conditions	Indoor Use
ELECTRICAL	
Wire Polarity	White=Positive(X1), Black=Negative(X2)
Phase Orientation	H1 Points Towards Source
Frequency Range	50-60Hz
Burden	2.5-5VA @1A, 5A and 10Ω@mA Output
Withstand Voltage	3,000VAC
Insulation Resistance	500V/100MΩ Min
Rated Continuous Thermal Current (I_{cth})	120% of Rated Current
SAFETY/COMPLIANCE	
Rated Voltage	600VAC, Rated CAT IV
Certifications & Compliance	CE, RoHS, UL 2808 Listed, CSA C22.2

Dimensions

A	Ø2.24″ (Ø57.0 mm)
B	2.44″ (62.0 mm)
C	2.05″ (52.0 mm)
D	1.65″ (42.0 mm)
E	1.26″ (32.0 mm)
F	0.47″ (12.0 mm)
G	0.83″ (21.0 mm)
H	1.46″ (37.0 mm)
I	1.85″ (47.0 mm)
J	2.15″ (54.5 mm)
K	2.48″ (63.0 mm)

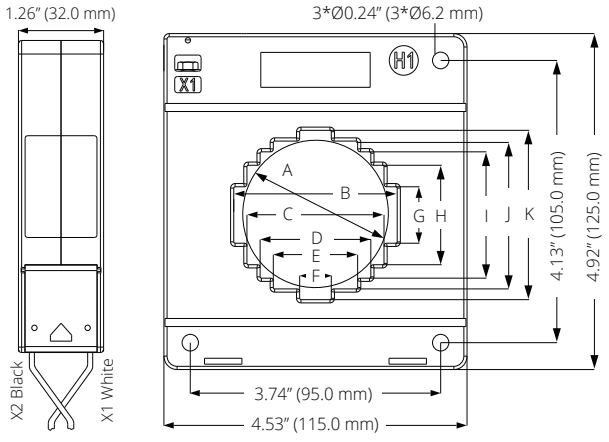

Typical Parameters

MODEL	CURRENT RATIO	ACCURACY	BURDEN / RESISTANCE	LEAD LENGTH
AcuCT-S220-200: 5A	200/5A	IEC 61869-2 Class 0.2	2.5VA	2.5m
AcuCT-S220-250: 5A	250/5A	IEC 61869-2 Class 0.2	2.5VA	2.5m
AcuCT-S220-300: 5A	300/5A	IEC 61869-2 Class 0.2	2.5VA	2.5m
AcuCT-S220-400: 5A	400/5A	IEC 61869-2 Class 0.2	2.5VA	2.5m
AcuCT-S220-500: 5A	500/5A	IEC 61869-2 Class 0.2	2.5VA	2.5m
AcuCT-S220-600: 5A	600/5A	IEC 61869-2 Class 0.2	2.5VA	2.5m
AcuCT-S220-800: 5A	800/5A	IEC 61869-2 Class 0.2	3.75VA	2.5m
AcuCT-S220-1000: 5A	1000/5A	IEC 61869-2 Class 0.2	5VA	2.5m
AcuCT-S220-1200: 5A	1200/5A	IEC 61869-2 Class 0.2	5VA	2.5m
AcuCT-S220-1500: 5A	1500/5A	IEC 61869-2 Class 0.2	5VA	2.5m
AcuCT-S220-200: 1A	200/1A	IEC 61869-2 Class 0.2	2.5VA	2.5m
AcuCT-S220-250: 1A	250/1A	IEC 61869-2 Class 0.2	2.5VA	2.5m
AcuCT-S220-300: 1A	300/1A	IEC 61869-2 Class 0.2	2.5VA	2.5m
AcuCT-S220-500: 1A	500/1A	IEC 61869-2 Class 0.2	2.5VA	2.5m
AcuCT-S220-600: 1A	600/1A	IEC 61869-2 Class 0.2	2.5VA	2.5m
AcuCT-S220-800: 1A	800/1A	IEC 61869-2 Class 0.2	3.75VA	2.5m
AcuCT-S220-1000: 1A	1000/1A	IEC 61869-2 Class 0.2	5VA	2.5m
AcuCT-S220-1200: 1A	1200/1A	IEC 61869-2 Class 0.2	5VA	2.5m
AcuCT-S220-1500: 1A	1500/1A	IEC 61869-2 Class 0.2	5VA	2.5m
AcuCT-S220-200: 100mA	200/100mA	IEC 61869-2 Class 0.2	10Ω	2.5m
AcuCT-S220-250: 100mA	250/100mA	IEC 61869-2 Class 0.2	10Ω	2.5m
AcuCT-S220-300: 100mA	300/100mA	IEC 61869-2 Class 0.2	10Ω	2.5m
AcuCT-S220-400: 100mA	400/100mA	IEC 61869-2 Class 0.2	10Ω	2.5m
AcuCT-S220-500: 100mA	500/100mA	IEC 61869-2 Class 0.2	10Ω	2.5m
AcuCT-S220-600: 100mA	600/100mA	IEC 61869-2 Class 0.2	10Ω	2.5m
AcuCT-S220-800: 100mA	800/100mA	IEC 61869-2 Class 0.2	10Ω	2.5m
AcuCT-S220-1000: 100mA	1000/100mA	IEC 61869-2 Class 0.2	10Ω	2.5m
AcuCT-S220-1200: 100mA	1200/100mA	IEC 61869-2 Class 0.2	10Ω	2.5m
AcuCT-S220-1500: 100mA	1500/100mA	IEC 61869-2 Class 0.2	10Ω	2.5m
AcuCT-S220-200: 80mA	200/80mA	IEC 61869-2 Class 0.2	10Ω	2.5m
AcuCT-S220-250: 80mA	250/80mA	IEC 61869-2 Class 0.2	10Ω	2.5m
AcuCT-S220-300: 80mA	300/80mA	IEC 61869-2 Class 0.2	10Ω	2.5m
AcuCT-S220-400: 80mA	400/80mA	IEC 61869-2 Class 0.2	10Ω	2.5m
AcuCT-S220-500: 80mA	500/80mA	IEC 61869-2 Class 0.2	10Ω	2.5m
AcuCT-S220-600: 80mA	600/80mA	IEC 61869-2 Class 0.2	10Ω	2.5m
AcuCT-S220-800: 80mA	800/80mA	IEC 61869-2 Class 0.2	10Ω	2.5m
AcuCT-S220-1000: 80mA	1000/80mA	IEC 61869-2 Class 0.2	10Ω	2.5m
AcuCT-S220-1200: 80mA	1200/80mA	IEC 61869-2 Class 0.2	10Ω	2.5m
AcuCT-S220-1500: 80mA	1500/80mA	IEC 61869-2 Class 0.2	10Ω	2.5m
AcuCT-S220-200: 333mV	200/333mV	IEC 61869-2 Class 0.2		2.5m
AcuCT-S220-250: 333mV	250/333mV	IEC 61869-2 Class 0.2		2.5m
AcuCT-S220-300: 333mV	300/333mV	IEC 61869-2 Class 0.2		2.5m
AcuCT-S220-400: 333mV	400/333mV	IEC 61869-2 Class 0.2		2.5m
AcuCT-S220-500: 333mV	500/333mV	IEC 61869-2 Class 0.2		2.5m
AcuCT-S220-600: 333mV	600/333mV	IEC 61869-2 Class 0.2		2.5m
AcuCT-S220-800: 333mV	800/333mV	IEC 61869-2 Class 0.2		2.5m
AcuCT-S220-1000: 333mV	1000/333mV	IEC 61869-2 Class 0.2		2.5m
AcuCT-S220-1200: 333mV	1200/333mV	IEC 61869-2 Class 0.2		2.5m
AcuCT-S220-1500: 333mV	1500/333mV	IEC 61869-2 Class 0.2		2.5m

The values in the table are the additional burden values containing 2.5 meters leads.

Accuracy Class 0.2

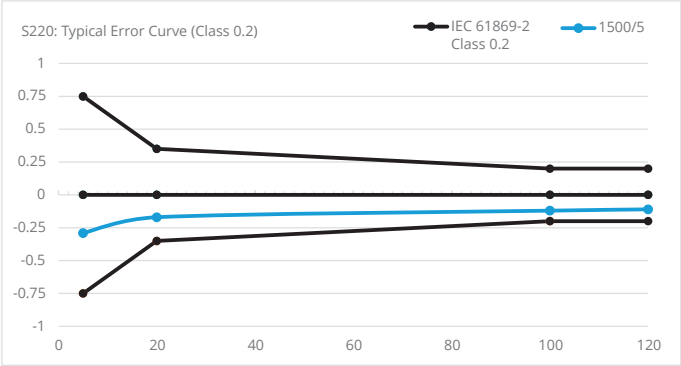

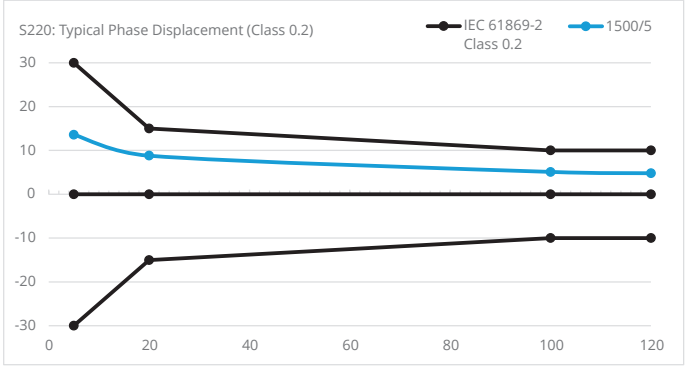

Mounting Brackets Accessory

Mounting accessories are available for AcuCT S series. Each mounting kit includes 4 mounting brackets, 2 mounting screws and 2 mounting nuts in the package.

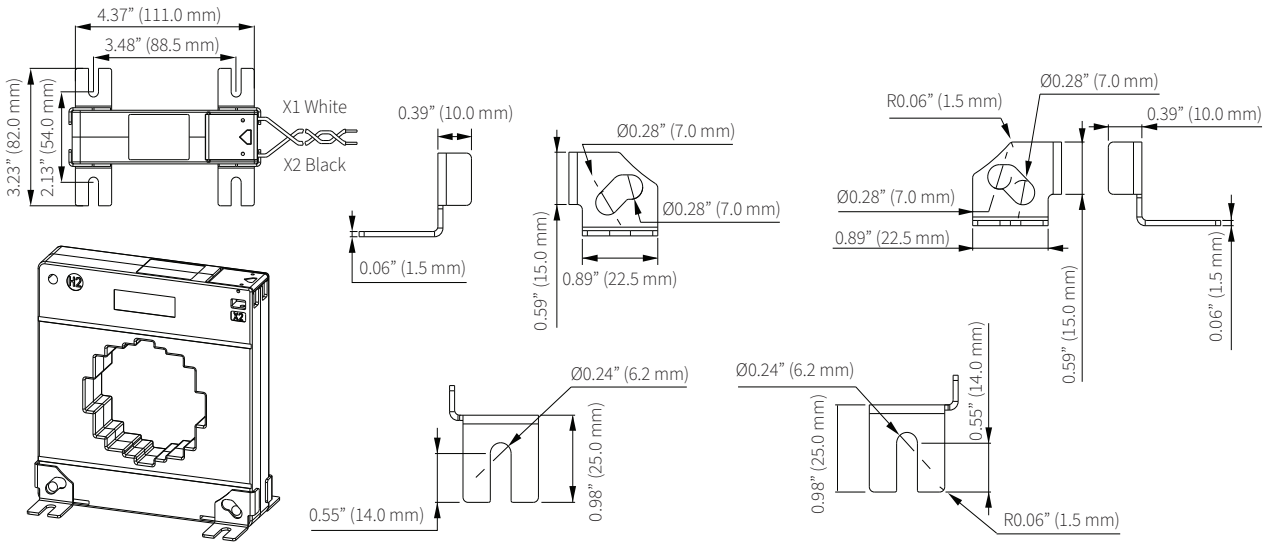

Installation Instructions

1. Our AcuCT S series CTs do not include mounting accessories by default. If required, please purchase them separately.
2. Mounting accessories are zinc-plated for effective rust protection and are attached to the CT using M6 screws.
   - Screw specification: M6 × 40 mm
   - Nut specification: M6 × 4 mm
   - Recommended tightening torque: 0.5–0.8 N·m

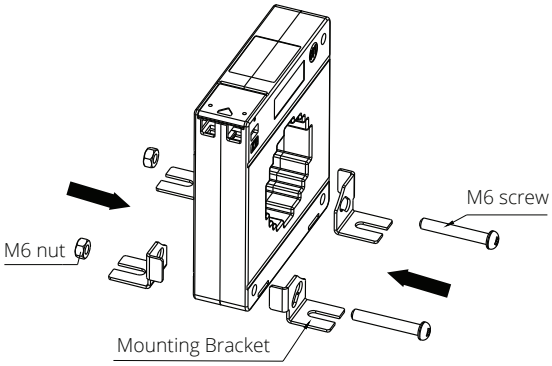

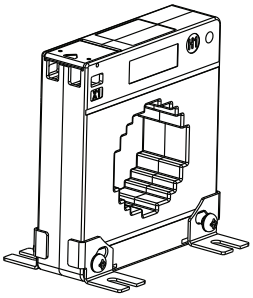

3. The primary conductor cable is threaded into CT from side H1, with the white wire being positive lead and the black wire being negative lead.

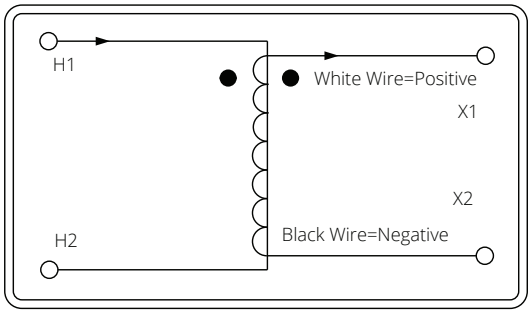

Ordering Information

	Model	-	*Rated Input*	:	*Rated Output*
	AcuCT-S220		200: 200A		5A
			250: 250A		1A
			300: 300A		100mA
			500: 500A		80mA
			600: 600A		333mV
			800: 800A		
			1000: 1000A		
			1200: 1200A		
			1500: 1500A		
Ordering Example	**AcuCT-S220**	**-**	**500**	**:**	**333mV**

	Model	-	*Rated Input*	:	*Rated Output*
	AcuCT-S220		400: 400A		5A
					333mV
					100mA
					80mA
Ordering Example	**AcuCT-S220**	**-**	**400**	**:**	**333mV**

+ Measurement Canada Approved

	Model	-	*Rated Input*	:	*Rated Output*	-	*Measurement Canada Application*
	AcuCT-S220		400: 400A		100mA		MC: Measurement Canada Approved
					80mA		
Ordering Example	**AcuCT-S220**	**-**	**400**	**:**	**100mA**	**-**	**MC**

+ Accessory *(Optional)*

Model	*Accessory*
ACUBRAC	S2
Ordering Example	**ACUBRAC - S2**

Mod-Tronic Instruments Ltd.
1-800-794-5883
www.mod-tronic.com
sales@mod-tronic.com

Revision Date: October 2026 Version: 1.1.0
Specs Subject To Change Without Notice.