AcuCT-S335 Series

Busbar Solid-Core Current Transformer

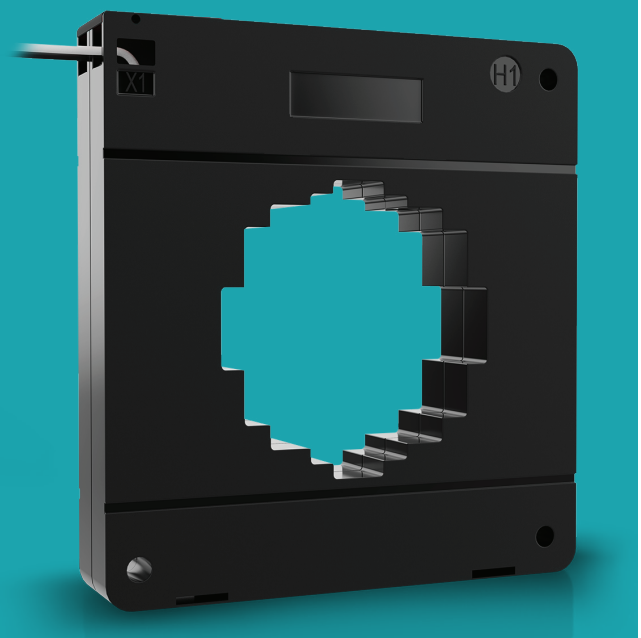

Ideal for mounting to a busbar or a cable, the AcuCT S335 is a solid-core current transformer for permanent installations. Features multiple input and output options in a compact form factor. It provides consistent, reliable measurements across industrial and commercial for general metering applications.

Features

- Accuracy class: 0.2 with a Measurement Canada approved model available at Class 0.15
- Current input options: 500A, 600A, 800A, 1000A, 1200A, 1500A, 2000A, 2500A, 3000A, 3500A
- Choose from five output options: 5A, 1A, 100mA, 80mA, 333mV

Specifications

RATED CURRENT	500A, 600A, 800A, 1000A, 1200A, 1500A, 2000A, 2500A, 3000A, 3500A
Current Range	5%-120% of Rated Current
Output	5A, 1A, 100mA, 80mA, 333mV
Accuracy	IEC 61869-2 Class 0.2 Measurement Canada Class 0.15
MECHANICAL/ENVIRONMENTAL	
Form Factor	Solid-Core CT
Window Size	Ø 72mm (2.83")
Exterior Dimensions	146.0mm x 156.0mm x 32.0mm 5.75" x 6.14" x 1.26"
Case Material	Epoxy Encapsulated Housing
Lead Wires	2.5m (8ft), Twisted Pair, 18AWG
Operating Temperature	-25°C to 70°C / -13°F to 158°F
Storage Temperature	-40°C to 80°C / -40°F to 176°F
Operating Humidity	<90% RH
Installation Conditions	Indoor Use
ELECTRICAL	
Wire Polarity	White=Positive(X1), Black=Negative(X2)
Phase Orientation	H1 Points Towards Source
Frequency Range	50-60Hz
Burden	2.5-15VA @ 1A, 5A and 10Ω@mA Output
Withstand Voltage	3,000VAC
Insulation Resistance	500V/100MΩ Min
Rated Continuous Thermal Current (I_{cth})	120% of Rated Current
SAFETY/COMPLIANCE	
Rated Voltage	600VAC, Rated CAT IV
Certifications & Compliance	cURus, CE, RoHS, UL 2808 Listed, CSA C22.2

Dimensions

A	Ø2.83" (Ø72.0 mm)
B	3.23" (82.0 mm)
C	2.68" (68.0 mm)
D	2.05" (52.0 mm)
E	1.10" (28.0 mm)
F	0.47" (12.0 mm)
G	0.83" (21.0 mm)
H	2.05" (52.0 mm)
I	2.60" (66.0 mm)
J	2.83" (72.0 mm)
K	3.15" (80.0 mm)

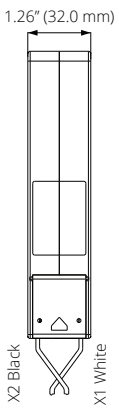

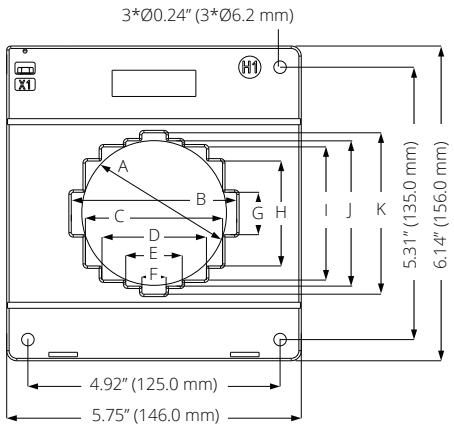

Typical Parameters

MODEL	CURRENT RATIO	ACCURACY	BURDEN / RESISTANCE	LEAD LENGTH
AcuCT-S335-500: 80mA	500/80mA	IEC 61869-2 Class 0.2	10Ω	2.5m
AcuCT-S335-600: 80mA	600/80mA	IEC 61869-2 Class 0.2	10Ω	2.5m
AcuCT-S335-800: 80mA	800/80mA	IEC 61869-2 Class 0.2	10Ω	2.5m
AcuCT-S335-1000: 80mA	1000/80mA	IEC 61869-2 Class 0.2	10Ω	2.5m
AcuCT-S335-1200: 80mA	1200/80mA	IEC 61869-2 Class 0.2	10Ω	2.5m
AcuCT-S335-1500: 80mA	1500/80mA	IEC 61869-2 Class 0.2	10Ω	2.5m
AcuCT-S335-2000: 80mA	2000/80mA	IEC 61869-2 Class 0.2	10Ω	2.5m
AcuCT-S335-2500: 80mA	2500/80mA	IEC 61869-2 Class 0.2	10Ω	2.5m
AcuCT-S335-3000: 80mA	3000/80mA	IEC 61869-2 Class 0.2	10Ω	2.5m
AcuCT-S335-3500: 80mA	3500/80mA	IEC 61869-2 Class 0.2	10Ω	2.5m
AcuCT-S335-500: 100mA	500/100mA	IEC 61869-2 Class 0.2	10Ω	2.5m
AcuCT-S335-600: 100mA	600/100mA	IEC 61869-2 Class 0.2	10Ω	2.5m
AcuCT-S335-800: 100mA	800/100mA	IEC 61869-2 Class 0.2	10Ω	2.5m
AcuCT-S335-1000: 100mA	1000/100mA	IEC 61869-2 Class 0.2	10Ω	2.5m
AcuCT-S335-1200: 100mA	1200/100mA	IEC 61869-2 Class 0.2	10Ω	2.5m
AcuCT-S335-1500: 100mA	1500/100mA	IEC 61869-2 Class 0.2	10Ω	2.5m
AcuCT-S335-2000: 100mA	2000/100mA	IEC 61869-2 Class 0.2	10Ω	2.5m
AcuCT-S335-2500: 100mA	2500/100mA	IEC 61869-2 Class 0.2	10Ω	2.5m
AcuCT-S335-3000: 100mA	3000/100mA	IEC 61869-2 Class 0.2	10Ω	2.5m
AcuCT-S335-3500: 100mA	3500/100mA	IEC 61869-2 Class 0.2	10Ω	2.5m
AcuCT-S335-500: 333mV	500/333mV	IEC 61869-2 Class 0.2		2.5m
AcuCT-S335-600: 333mV	600/333mV	IEC 61869-2 Class 0.2		2.5m
AcuCT-S335-800: 333mV	800/333mV	IEC 61869-2 Class 0.2		2.5m
AcuCT-S335-1000: 333mV	1000/333mV	IEC 61869-2 Class 0.2		2.5m
AcuCT-S335-1200: 333mV	1200/333mV	IEC 61869-2 Class 0.2		2.5m
AcuCT-S335-1500: 333mV	1500/333mV	IEC 61869-2 Class 0.2		2.5m
AcuCT-S335-2000: 333mV	2000/333mV	IEC 61869-2 Class 0.2		2.5m
AcuCT-S335-2500: 333mV	2500/333mV	IEC 61869-2 Class 0.2		2.5m
AcuCT-S335-3000: 333mV	3000/333mV	IEC 61869-2 Class 0.2		2.5m
AcuCT-S335-3500: 333mV	3500/333mV	IEC 61869-2 Class 0.2		2.5m
AcuCT-S335-500: 1A	500/1A	IEC 61869-2 Class 0.2	2.5VA	2.5m
AcuCT-S335-600: 1A	600/1A	IEC 61869-2 Class 0.2	2.5VA	2.5m
AcuCT-S335-800: 1A	800/1A	IEC 61869-2 Class 0.2	3.75VA	2.5m
AcuCT-S335-1000: 1A	1000/1A	IEC 61869-2 Class 0.2	5VA	2.5m
AcuCT-S335-1200: 1A	1200/1A	IEC 61869-2 Class 0.2	5VA	2.5m
AcuCT-S335-1500: 1A	1500/1A	IEC 61869-2 Class 0.2	5VA	2.5m
AcuCT-S335-2000: 1A	2000/1A	IEC 61869-2 Class 0.2	7.5VA	2.5m
AcuCT-S335-2500: 1A	2500/1A	IEC 61869-2 Class 0.2	15VA	2.5m
AcuCT-S335-3000: 1A	3000/1A	IEC 61869-2 Class 0.2	15VA	2.5m
AcuCT-S335-3500: 1A	3500/1A	IEC 61869-2 Class 0.2	15VA	2.5m
AcuCT-S335-500: 5A	500/5A	IEC 61869-2 Class 0.2	2.5VA	2.5m
AcuCT-S335-600: 5A	600/5A	IEC 61869-2 Class 0.2	2.5VA	2.5m
AcuCT-S335-800: 5A	800/5A	IEC 61869-2 Class 0.2	3.75VA	2.5m
AcuCT-S335-1000: 5A	1000/5A	IEC 61869-2 Class 0.2	5VA	2.5m
AcuCT-S335-1200: 5A	1200/5A	IEC 61869-2 Class 0.2	5VA	2.5m

AcuCT-S335-1500: 5A	1500/5A	IEC 61869-2 Class 0.2	5VA	2.5m
AcuCT-S335-2000: 5A	2000/5A	IEC 61869-2 Class 0.2	7.5VA	2.5m
AcuCT-S335-2500: 5A	2500/5A	IEC 61869-2 Class 0.2	15VA	2.5m
AcuCT-S335-3000: 5A	3000/5A	IEC 61869-2 Class 0.2	15VA	2.5m
AcuCT-S335-3500: 5A	3500/5A	IEC 61869-2 Class 0.2	15VA	2.5m

The values in the table are the additional burden values containing 2.5 meters leads.

Accuracy Class 0.2

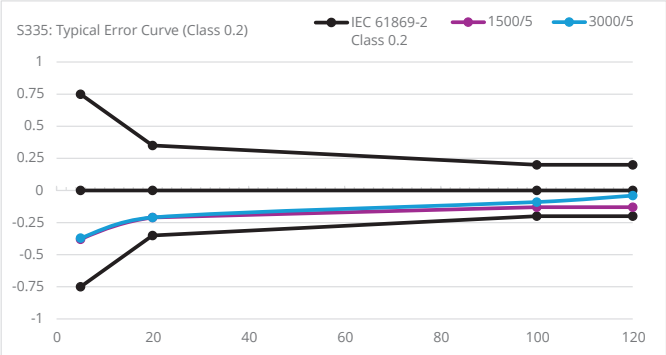

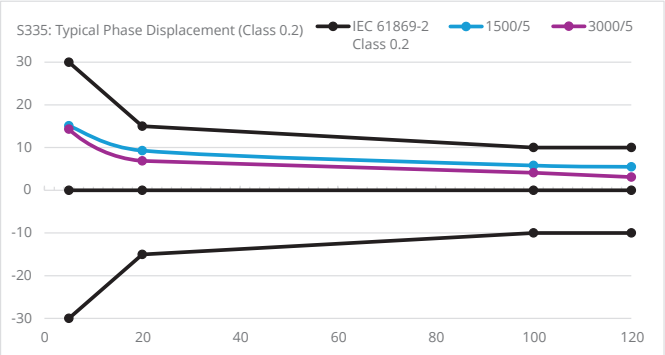

Mounting Brackets Accessory

Mounting accessories are available for AcuCT S series, each mounting kit includes 4 mounting brackets, 2 mounting screws and 2 mounting nuts in the package.

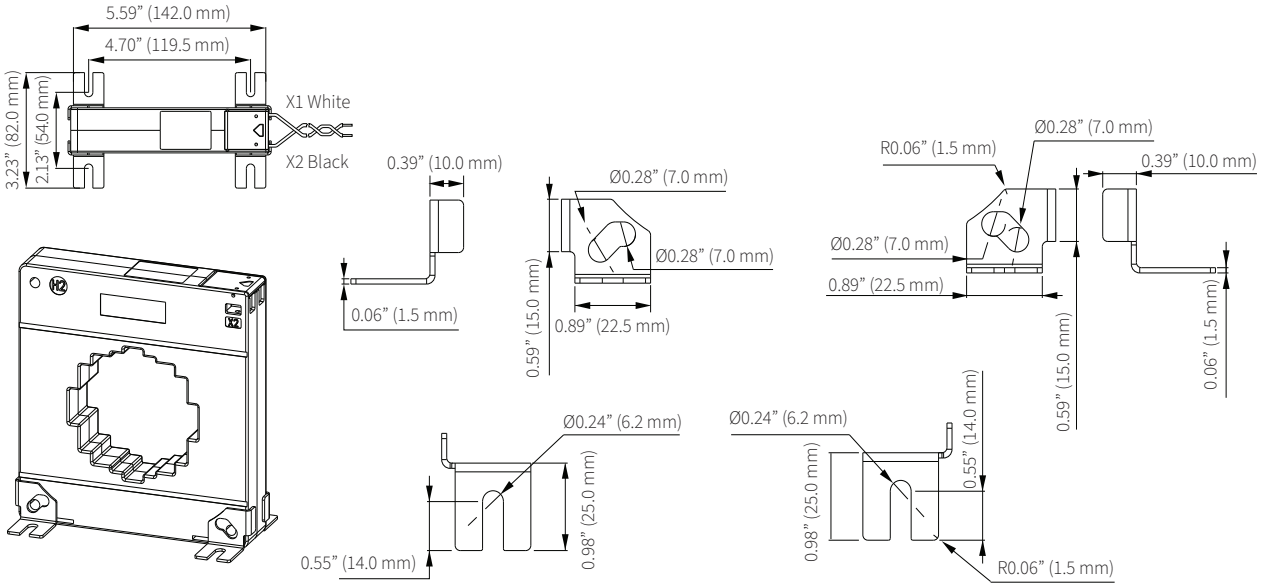

Installation Instructions

1. Our AcuCT S series CTs do not include mounting accessories by default. If required, please purchase them separately.
2. Mounting accessories are zinc-plated for effective rust protection and are attached to the CT using M6 screws.
   - Screw specification: M6 × 40 mm
   - Nut specification: M6 × 4 mm
   - Recommended tightening torque: 0.5–0.8 N·m

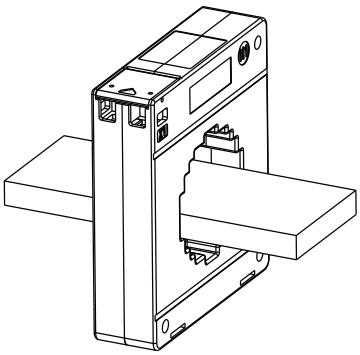

3. The primary busbar/cable is threaded into CT from side H1, with the white wire being positive lead and the black wire being negative lead.

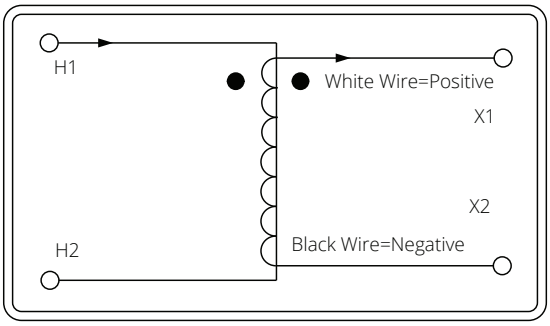

Ordering Information

	Model	-	*Rated Input*	:	*Rated Output*
	AcuCT-S335		500: 500A		5A
			600: 600A		1A
			800: 800A		100mA
			1000: 1000A		80mA
			1200: 1200A		333mV
			1500: 1500A		
			2000: 2000A		
			2500: 2500A		
			3000: 3000A		
			3500: 3500A		
Ordering Example	**AcuCT-S335**	**-**	**500**	**:**	**333mV**

+ Measurement Canada Approved

	Model	-	*Rated Input*	:	*Rated Output*	-	*Measurement Canada Application*
	AcuCT-S335		800: 800A		100mA		MC: Measurement Canada Approved
Ordering Example	**AcuCT-S335**	**-**	**800**	**:**	**100mA**	**-**	**MC**

+ Accessory *(Optional)*

Model	*Accessory*
ACUBRAC	S2
Ordering Example	**ACUBRAC - S2**

Mod-Tronic Instruments Ltd.
1-800-794-5883
www.mod-tronic.com
sales@mod-tronic.com

Revision Date: September 2026 Version: 1.0.8
Specs Subject To Change Without Notice.