AcuCT-S433 Series

Instrument Solid-Core Current Transformer

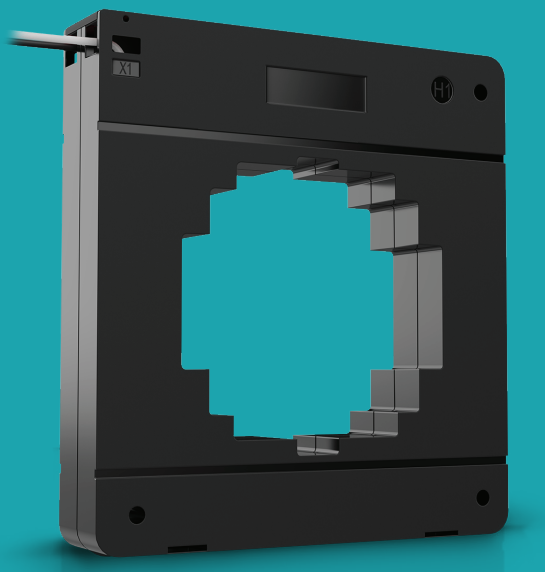

The AcuCT S433 is used in permanent metering installations with rated outputs for 5A, 1A, 100mA, 80mA, 333mV. It provides consistent, reliable measurements across industrial and commercial for general metering applications.

Features

- Accuracy class: 0.2
- Current input options: 800A, 1000A, 1200A, 1500A, 2000A, 2500A, 3000A, 3500A, 4000A
- Choose from five output options: 5A, 1A, 100mA, 80mA, 333mV

Specifications

RATED CURRENT	800A, 1000A, 1200A, 1500A, 2000A, 2500A, 3000A, 3500A, 4000A
Current Range	5%-120% of Rated Current
Output	5A, 1A, 100mA, 80mA, 333mV
Accuracy	IEC 61869-2 Class 0.2
MECHANICAL/ENVIRONMENTAL	
Form Factor	Solid-Core CT
Window Size	Ø 93.0mm (3.66")
Exterior Dimensions	165.0mm x 175.0mm x 35.0mm 6.50" x 6.89" x 1.38"
Case Material	Epoxy Encapsulated Housing
Lead Wires	2.5m (8ft), Twisted Pair, 18AWG
Operating Temperature	-25°C to 70°C / -13°F to 158°F
Storage Temperature	-40°C to 80°C / -40°F to 176°F
Operating Humidity	<90% RH
Installation Conditions	Indoor Use
ELECTRICAL	
Wire Polarity	WWhite=Positive(X1), Black=Negative(X2)
Phase Orientation	H1 Points Towards Source
Frequency Range	50-400Hz
Burden	3.75VA-15VA@1A and 5A, 10Ω@mA Output
Withstand Voltage	3,000VAC
Insulation Resistance	500V/100MΩ Min
Rated Continuous Thermal Current (I_{cth})	120% of Rated Current
SAFETY/COMPLIANCE	
Rated Voltage	600VAC, Rated CAT IV
Certifications & Compliance	cURus, CE, RoHS, UL 2808 Listed, CSA C22.2

Dimensions

A	Ø3.66" (Ø93.0 mm)
B	4.02" (102.0 mm)
C	3.23" (82.0 mm)
D	2.44" (62.0 mm)
E	0.47" (12.0 mm)
F	1.65" (42.0 mm)
G	2.83" (72.0 mm)
H	3.58" (91.0 mm)
I	3.90" (99.0 mm)

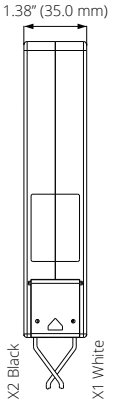

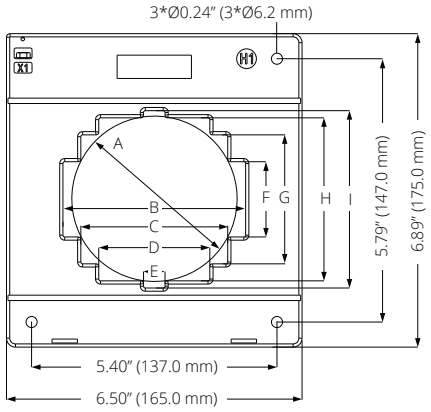

Typical Parameters

MODEL	CURRENT RATIO	ACCURACY	BURDEN / RESISTANCE	LEAD LENGTH
AcuCT-S433-800: 5A	800/5A	IEC 61869-2 Class 0.2	3.75VA	2.5m
AcuCT-S433-1000: 5A	1000/5A	IEC 61869-2 Class 0.2	5VA	2.5m
AcuCT-S433-1200: 5A	1200/5A	IEC 61869-2 Class 0.2	5VA	2.5m
AcuCT-S433-1500: 5A	1500/5A	IEC 61869-2 Class 0.2	5VA	2.5m
AcuCT-S433-2000: 5A	2000/5A	IEC 61869-2 Class 0.2	7.5VA	2.5m
AcuCT-S433-2500: 5A	2500/5A	IEC 61869-2 Class 0.2	15VA	2.5m
AcuCT-S433-3000: 5A	3000/5A	IEC 61869-2 Class 0.2	15VA	2.5m
AcuCT-S433-3500: 5A	3500/5A	IEC 61869-2 Class 0.2	15VA	2.5m
AcuCT-S433-4000: 5A	4000/5A	IEC 61869-2 Class 0.2	15VA	2.5m
AcuCT-S433-800: 1A	800/1A	IEC 61869-2 Class 0.2	3.75VA	2.5m
AcuCT-S433-1000: 1A	1000/1A	IEC 61869-2 Class 0.2	5VA	2.5m
AcuCT-S433-1200: 1A	1200/1A	IEC 61869-2 Class 0.2	5VA	2.5m
AcuCT-S433-1500: 1A	1500/1A	IEC 61869-2 Class 0.2	5VA	2.5m
AcuCT-S433-2000: 1A	2000/1A	IEC 61869-2 Class 0.2	7.5VA	2.5m
AcuCT-S433-2500: 1A	2500/1A	IEC 61869-2 Class 0.2	15VA	2.5m
AcuCT-S433-3000: 1A	3000/1A	IEC 61869-2 Class 0.2	15VA	2.5m
AcuCT-S433-3500: 1A	3500/1A	IEC 61869-2 Class 0.2	15VA	2.5m
AcuCT-S433-4000: 1A	4000/1A	IEC 61869-2 Class 0.2	15VA	2.5m
AcuCT-S433-800: 100mA	800/100mA	IEC 61869-2 Class 0.2	10Ω	2.5m
AcuCT-S433-1000: 100mA	1000/100mA	IEC 61869-2 Class 0.2	10Ω	2.5m
AcuCT-S433-1200: 100mA	1200/100mA	IEC 61869-2 Class 0.2	10Ω	2.5m
AcuCT-S433-1500: 100mA	1500/100mA	IEC 61869-2 Class 0.2	10Ω	2.5m
AcuCT-S433-2000: 100mA	2000/100mA	IEC 61869-2 Class 0.2	10Ω	2.5m
AcuCT-S433-2500: 100mA	2500/100mA	IEC 61869-2 Class 0.2	10Ω	2.5m
AcuCT-S433-3000: 100mA	3000/100mA	IEC 61869-2 Class 0.2	10Ω	2.5m
AcuCT-S433-3500: 100mA	3500/100mA	IEC 61869-2 Class 0.2	10Ω	2.5m
AcuCT-S433-4000: 100mA	4000/100mA	IEC 61869-2 Class 0.2	10Ω	2.5m
AcuCT-S433-800: 80mA	800/80mA	IEC 61869-2 Class 0.2	10Ω	2.5m
AcuCT-S433-1000: 80mA	1000/80mA	IEC 61869-2 Class 0.2	10Ω	2.5m
AcuCT-S433-1200: 80mA	1200/80mA	IEC 61869-2 Class 0.2	10Ω	2.5m
AcuCT-S433-1500: 80mA	1500/80mA	IEC 61869-2 Class 0.2	10Ω	2.5m
AcuCT-S433-2000: 80mA	2000/80mA	IEC 61869-2 Class 0.2	10Ω	2.5m
AcuCT-S433-2500: 80mA	2500/80mA	IEC 61869-2 Class 0.2	10Ω	2.5m
AcuCT-S433-3000: 80mA	3000/80mA	IEC 61869-2 Class 0.2	10Ω	2.5m
AcuCT-S433-3500: 80mA	3500/80mA	IEC 61869-2 Class 0.2	10Ω	2.5m
AcuCT-S433-4000: 80mA	4000/80mA	IEC 61869-2 Class 0.2	10Ω	2.5m
AcuCT-S433-800: 333mV	800/333mV	IEC 61869-2 Class 0.2		2.5m
AcuCT-S433-1000: 333mV	1000/333mV	IEC 61869-2 Class 0.2		2.5m
AcuCT-S433-1200: 333mV	1200/333mV	IEC 61869-2 Class 0.2		2.5m
AcuCT-S433-1500: 333mV	1500/333mV	IEC 61869-2 Class 0.2		2.5m
AcuCT-S433-2000: 333mV	2000/333mV	IEC 61869-2 Class 0.2		2.5m
AcuCT-S433-2500: 333mV	2500/333mV	IEC 61869-2 Class 0.2		2.5m
AcuCT-S433-3000: 333mV	3000/333mV	IEC 61869-2 Class 0.2		2.5m
AcuCT-S433-3500: 333mV	3500/333mV	IEC 61869-2 Class 0.2		2.5m
AcuCT-S433-4000: 333mV	4000/333mV	IEC 61869-2 Class 0.2		2.5m

The values in the table are the additional burden values containing 2.5 meters leads.

Accuracy Class 0.2

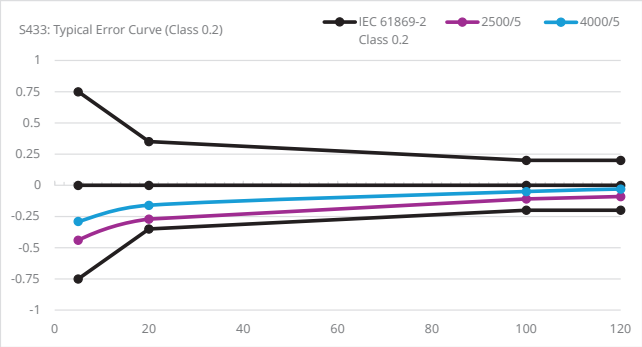

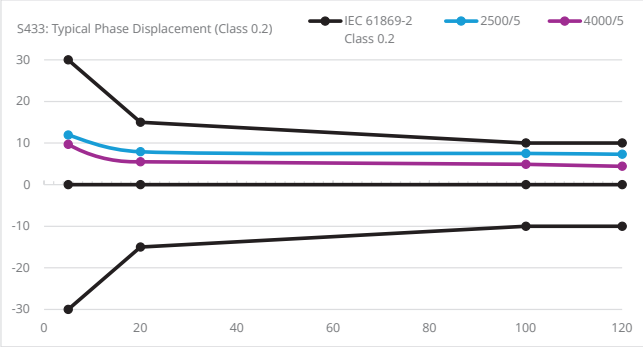

Mounting Brackets Accessory

Mounting accessories are available for AcuCT S series. Each mounting kit includes 4 mounting brackets, 2 mounting screws and 2 mounting nuts in the package.

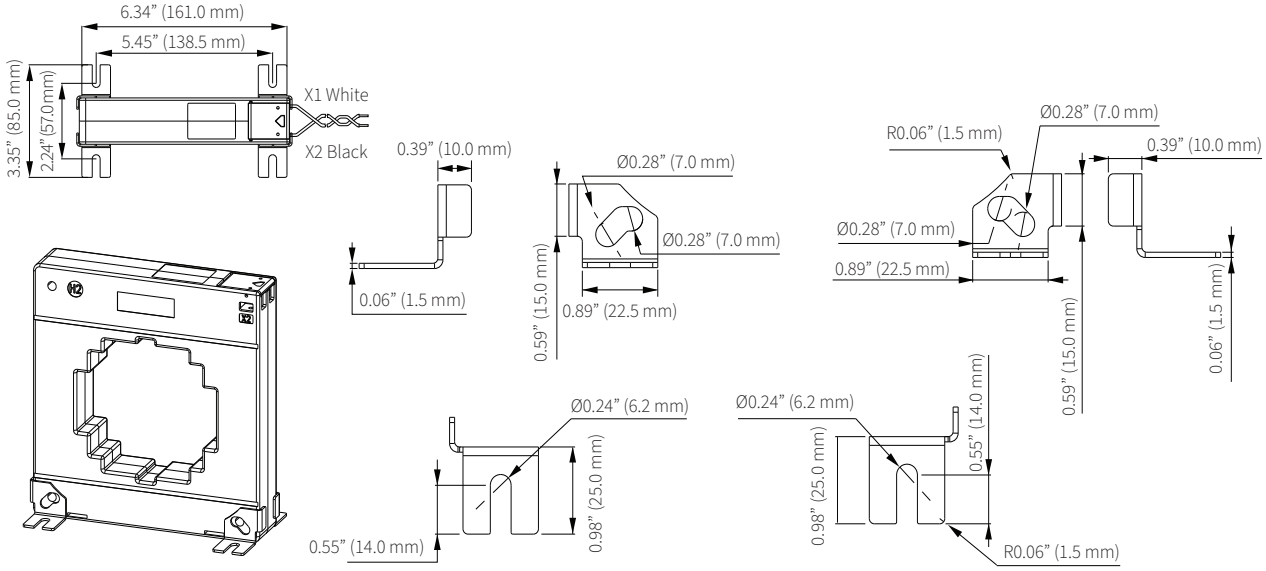

Installation Instructions

1. Our AcuCT S series CTs do not include mounting accessories by default. If required, please purchase them separately.
2. Mounting accessories are zinc-plated for effective rust protection and are attached to the CT using M6 screws.
   - Screw specification: M6 × 45 mm
   - Nut specification: M6 × 4 mm
   - Recommended tightening torque: 0.5–0.8 N·m

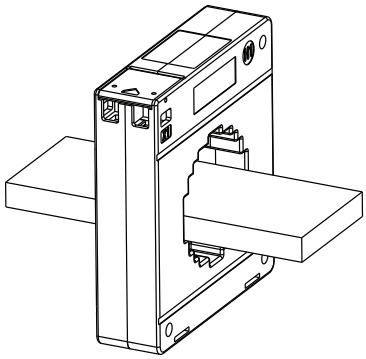

3. The primary cable/busbar is threaded into CT from side H1, with the white wire being positive lead and the black wire being negative lead.

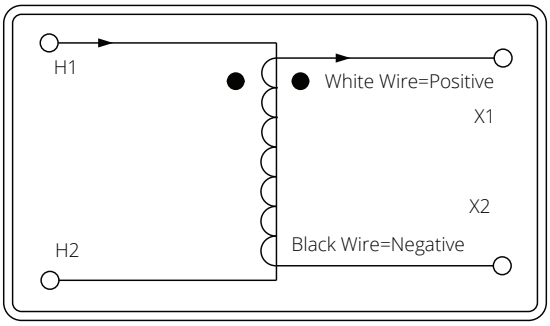

Ordering Information

	Model	-	*Rated Input*	:	*Rated Output*
	AcuCT-S433		800: 800A		5A
			1000: 1000A		1A
			1200: 1200A		100mA
			1500: 1500A		80mA
			2000: 2000A		333mV
			2500: 2500A		
			3000: 3000A		
			3500: 3500A		
			4000: 4000A		
Ordering Example	**AcuCT-S433**	**-**	**3000**	**:**	**333mV**

\+ **Accessory *(Optional)***

Model	*Accessory*
ACUBRAC	S3
Ordering Example	**ACUBRAC - S3**

Mod-Tronic Instruments Ltd.
1-800-794-5883
www.mod-tronic.com
sales@mod-tronic.com

Revision Date: September 2026 Version: 1.0.8
Specs Subject To Change Without Notice.