AcuCT-S650 Series

Solid-Core Current Transformer

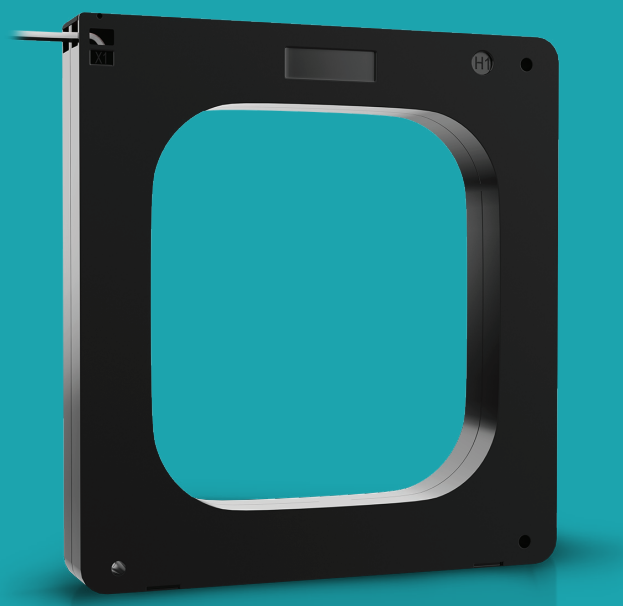

High accuracy solid-core current transformer for permanent installations. The AcuCT S650 features multiple input and output options in a small compact form factor. It provides consistent, reliable measurements across industrial and commercial for general metering applications.

Features

- Accuracy class: Standard IEC 61869-2 Class 0.2
- Special order: IEC 61869-2 Class 0.2S accuracy available for all models
- Current input options: 800A, 1000A, 1200A, 1500A, 2000A, 2500A, 3000A, 3500A, 4000A
- Choose from five output options: 5A, 1A, 100mA, 80mA, 333mV

Specifications

RATED CURRENT	800A, 1000A, 1200A, 1500A, 2000A, 2500A, 3000A, 3500A, 4000A
Current Range	5%-120% of Rated Current for IEC 61869-2 Class 0.2 Models 1%-120% of Rated Current for IEC 61869-2 Class 0.2S Models
Output	5A, 1A, 100mA, 80mA, 333mV
Accuracy	IEC 61869-2 Class 0.2 IEC 61869-2 Class 0.2S*
MECHANICAL/ENVIRONMENTAL	
Form Factor	Solid-Core CT
Window Size	160.0mm x 160.0mm (6.30" x 6.30")
Exterior Dimensions	220.0mm x 230.0mm x 35.0mm 8.66" x 9.06" x 1.38"
Case Material	Epoxy Encapsulated Housing
Lead Wires	2.5m (8ft), Twisted Pair, 16/18AWG
Operating Temperature	-25°C to 70°C / -13°F to 158°F
Storage Temperature	-40°C to 80°C / -40°F to 176°F
Operating Humidity	<90% RH
Installation Conditions	Indoor Use
ELECTRICAL	
Wire Polarity	White=Positive(X1), Black=Negative(X2)
Phase Orientation	H1 Points Towards Source
Frequency Range	50-60Hz
Burden	3.75-15VA for 1A, 5A and 10Ω@mA Output
Withstand Voltage	3,000VAC
Insulation Resistance	500V/100MΩ Min
Rated Continuous Thermal Current (I_{cth})	120% of Rated Current
SAFETY/COMPLIANCE	
Rated Voltage	600VAC, Rated CAT IV
Certifications & Compliance	cURus, CE, RoHS, UL 2808 Listed, CSA C22.2

** Available as special order*

Dimensions

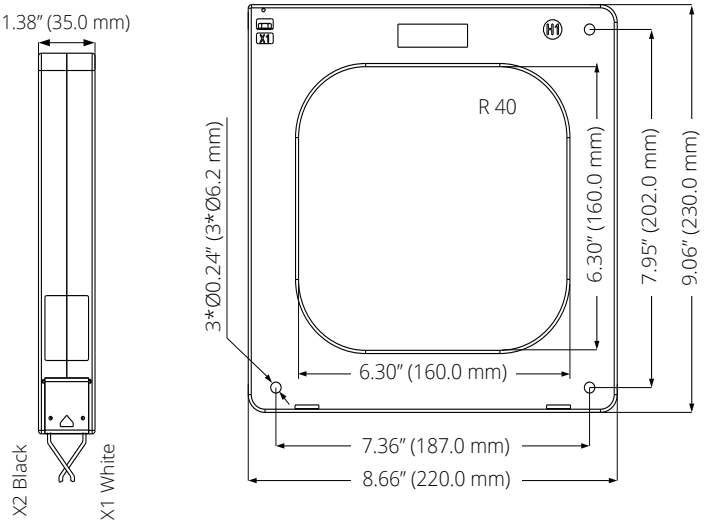

Typical Parameters

MODEL	CURRENT RATIO	ACCURACY	BURDEN / RESISTANCE	LEAD LENGTH
AcuCT-S650-800: 5A	800/5A	IEC 61869-2 Class 0.2	3.75VA	2.5m
AcuCT-S650-1000: 5A	1000/5A	IEC 61869-2 Class 0.2	5VA	2.5m
AcuCT-S650-1200: 5A	1200/5A	IEC 61869-2 Class 0.2	5VA	2.5m
AcuCT-S650-1500: 5A	1500/5A	IEC 61869-2 Class 0.2	5VA	2.5m
AcuCT-S650-2000: 5A	2000/5A	IEC 61869-2 Class 0.2	7.5VA	2.5m
AcuCT-S650-2500: 5A	2500/5A	IEC 61869-2 Class 0.2	15VA	2.5m
AcuCT-S650-3000: 5A	3000/5A	IEC 61869-2 Class 0.2	15VA	2.5m
AcuCT-S650-3500: 5A	3500/5A	IEC 61869-2 Class 0.2	15VA	2.5m
AcuCT-S650-4000: 5A	4000/5A	IEC 61869-2 Class 0.2	15VA	2.5m
AcuCT-S650-800: 1A	800/1A	IEC 61869-2 Class 0.2	3.75VA	2.5m
AcuCT-S650-1000: 1A	1000/1A	IEC 61869-2 Class 0.2	5VA	2.5m
AcuCT-S650-1200: 1A	1200/1A	IEC 61869-2 Class 0.2	5VA	2.5m
AcuCT-S650-1500: 1A	1500/1A	IEC 61869-2 Class 0.2	5VA	2.5m
AcuCT-S650-2000: 1A	2000/1A	IEC 61869-2 Class 0.2	7.5VA	2.5m
AcuCT-S650-2500: 1A	2500/1A	IEC 61869-2 Class 0.2	15VA	2.5m
AcuCT-S650-3000: 1A	3000/1A	IEC 61869-2 Class 0.2	15VA	2.5m
AcuCT-S650-3500: 1A	3500/1A	IEC 61869-2 Class 0.2	15VA	2.5m
AcuCT-S650-4000: 1A	4000/1A	IEC 61869-2 Class 0.2	15VA	2.5m
AcuCT-S650-1000: 100mA	1000/100mA	IEC 61869-2 Class 0.2	10Ω	2.5m
AcuCT-S650-1200: 100mA	1200/100mA	IEC 61869-2 Class 0.2	10Ω	2.5m
AcuCT-S650-1500: 100mA	1500/100mA	IEC 61869-2 Class 0.2	10Ω	2.5m
AcuCT-S650-2000: 100mA	2000/100mA	IEC 61869-2 Class 0.2	10Ω	2.5m
AcuCT-S650-2500: 100mA	2500/100mA	IEC 61869-2 Class 0.2	10Ω	2.5m
AcuCT-S650-3000: 100mA	3000/100mA	IEC 61869-2 Class 0.2	10Ω	2.5m
AcuCT-S650-3500: 100mA	3500/100mA	IEC 61869-2 Class 0.2	10Ω	2.5m
AcuCT-S650-4000: 100mA	4000/100mA	IEC 61869-2 Class 0.2	10Ω	2.5m
AcuCT-S650-800: 80mA	800/80mA	IEC 61869-2 Class 0.2	10Ω	2.5m
AcuCT-S650-1000: 80mA	1000/80mA	IEC 61869-2 Class 0.2	10Ω	2.5m
AcuCT-S650-1200: 80mA	1200/80mA	IEC 61869-2 Class 0.2	10Ω	2.5m
AcuCT-S650-1500: 80mA	1500/80mA	IEC 61869-2 Class 0.2	10Ω	2.5m
AcuCT-S650-2000: 80mA	2000/80mA	IEC 61869-2 Class 0.2	10Ω	2.5m
AcuCT-S650-2500: 80mA	2500/80mA	IEC 61869-2 Class 0.2	10Ω	2.5m
AcuCT-S650-3000: 80mA	3000/80mA	IEC 61869-2 Class 0.2	10Ω	2.5m
AcuCT-S650-3500: 80mA	3500/80mA	IEC 61869-2 Class 0.2	10Ω	2.5m
AcuCT-S650-4000: 80mA	4000/80mA	IEC 61869-2 Class 0.2	10Ω	2.5m
AcuCT-S650-800: 100mA	800/100mA	IEC 61869-2 Class 0.2	10Ω	2.5m
AcuCT-S650-800: 333mV	800/333mV	IEC 61869-2 Class 0.2		2.5m
AcuCT-S650-1000: 333mV	1000/333mV	IEC 61869-2 Class 0.2		2.5m
AcuCT-S650-1200: 333mV	1200/333mV	IEC 61869-2 Class 0.2		2.5m
AcuCT-S650-1500: 333mV	1500/333mV	IEC 61869-2 Class 0.2		2.5m
AcuCT-S650-2000: 333mV	2000/333mV	IEC 61869-2 Class 0.2		2.5m
AcuCT-S650-2500: 333mV	2500/333mV	IEC 61869-2 Class 0.2		2.5m
AcuCT-S650-3000: 333mV	3000/333mV	IEC 61869-2 Class 0.2		2.5m
AcuCT-S650-3500: 333mV	3500/333mV	IEC 61869-2 Class 0.2		2.5m
AcuCT-S650-4000: 333mV	4000/333mV	IEC 61869-2 Class 0.2		2.5m

Models with IEC 61869-2 Class 0.2S accuracy are available on all part numbers listed in the typical parameters table as a special custom order. Burden, lead length and dimensions remain unchanged.

Accuracy Class 0.2

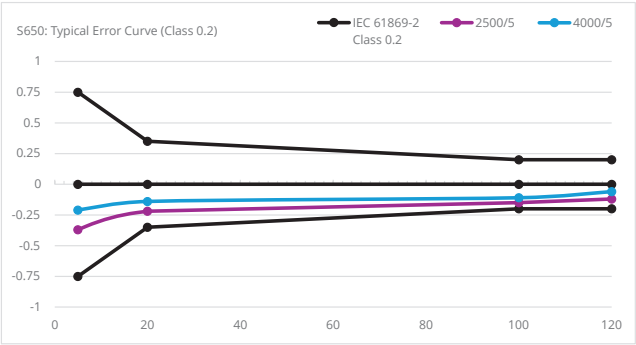

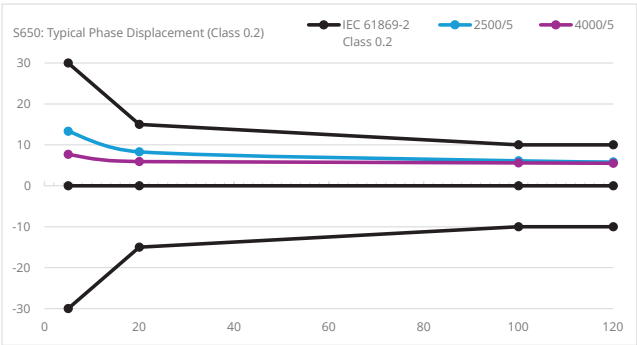

Mounting Brackets Accessory

Mounting accessories are available for AcuCT S series. Each mounting kit includes 4 mounting brackets, 2 mounting screws and 2 mounting nuts in the package.

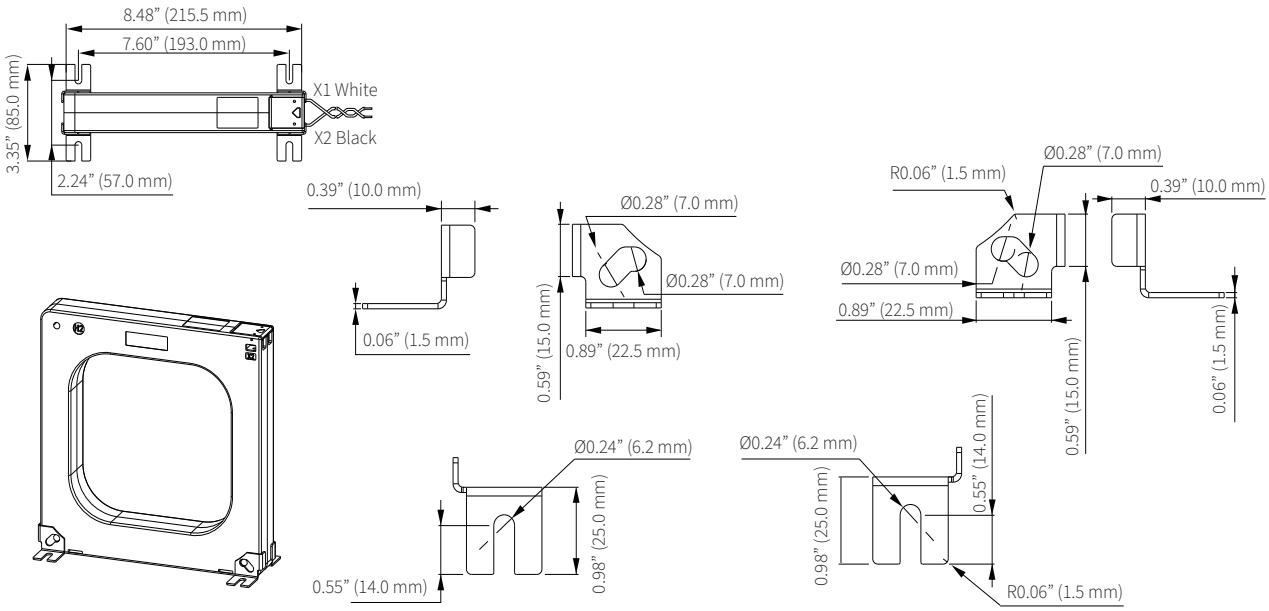

Installation Instructions

1. Our AcuCT S series CTs do not include mounting accessories by default. If required, please purchase them separately.
2. Mounting accessories are zinc-plated for effective rust protection and are attached to the CT using M6 screws.
   - Screw specification: M6 × 45 mm
   - Nut specification: M6 × 4 mm
   - Recommended tightening torque: 0.5–0.8 N·m

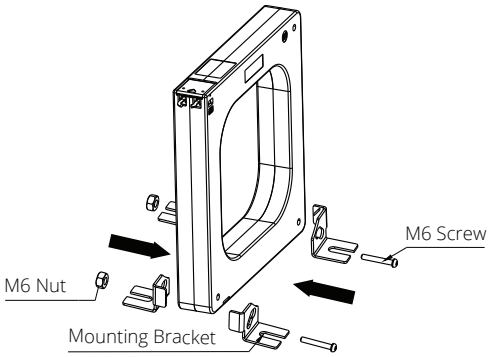

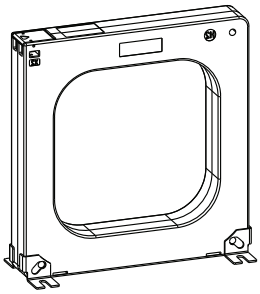

3. The primary cable/busbar is threaded into CT from side H1, with the white wire being positive lead and the black wire being negative lead.

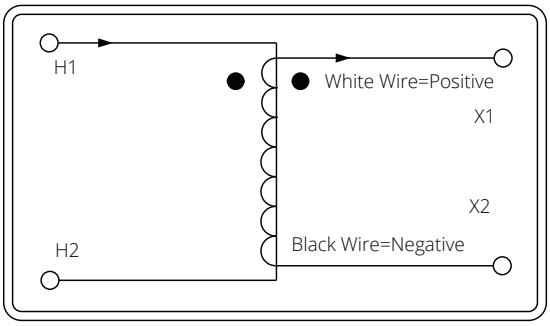

Ordering Information

	Model	-	*Rated Input*	:	*Rated Output*	-	*Accuracy*
	AcuCT-S650		800: 800A		5A		Blank: Class 0.2
			1000: 1000A		1A		0.2s: Class 0.2S
			1200: 1200A		100mA		
			1500: 1500A		80mA		
			2000: 2000A		333mV		
			2500: 2500A				
			3000: 3000A				
			3500: 3500A				
			4000: 4000A				
Ordering Example	**AcuCT-S650**	**-**	**3000**	**:**	**80mA**		
	AcuCT-S650	**-**	**3500**	**:**	**333mV**	**-**	**0.2s**

\+

Accessory *(Optional)*	
Model	*Accessory*
ACUBRAC	S3
Ordering Example	**ACUBRAC - S3**

Mod-Tronic Instruments Ltd.
1-800-794-5883
www.mod-tronic.com
sales@mod-tronic.com

Revision Date: September 2026 Version: 1.0.8
Specs Subject To Change Without Notice.