AcuCT-S77 Series

Revenue Grade Solid-Core Current Transformer Datasheet



The solid-core AcuCT S77 current transformer delivers industry-leading IEC 61869-2 Class 0.2 accuracy and is Measurement Canada approved under S-E-09 Class 0.15. An essential tool in revenue or billing applications, the S77 can be paired with high-accuracy power and energy meters to deliver best-in class signal transformation and precision measurements. The solid-core form factor is resilient against dust or debris and is ideal for challenging installation sites.

Features

- Accuracy: MC S-E-09 Class 0.15 and IEC 61869-2 Class 0.2
- Two current input options: 100A or 200A
- Three rated output options: 80mA, 100mA, or 333mV
- Rugged Solid-Core design for high performance in harsh environments
- Measurement Canada Approved
- UL2808 Listed, compliant with CSA C61869 and IEC 61010-1

Mod-Tronic Instruments Ltd.
Brampton, Ontario, Canada
Tel: 1-800-794-5883
Web: www.mod-tronic.com
Email: sales@mod-tronic.com

Revision Date: September 2026 Version: 1.0.10
Specs Subject To Change Without Notice.

Specifications

RATED CURRENT	100A, 200A
Current Range	10%-120% of rated current
Output	80mA, 100mA, 333mV
Accuracy	IEC 61869-2 Class 0.2 Measurement Canada S-E-09 Class 0.15 @80mA & 100 mA
MECHANICAL/ENVIRONMENTAL	
Form Factor	Solid-Core CT
Window Size	Ø 19.6mm (0.77")
Exterior Dimensions	51.0mm x 19.0mm 2.00" x 0.75"
Case Material	UL 94V-0 Rated Flame Retardant
Lead Wires	305mm (1ft), 18AWG UL 1015
Operating Temperature	-25°C to 80°C / -13°F to 176°F
Operating Humidity	Non-Condensing, 5 to 95% RH
Installation Conditions	Indoor Use
ELECTRICAL	
Wire Polarity	White=Positive, Black=Negative
Phase Orientation	H1 points towards source
Frequency Range	50/60Hz
Burden	B0.005 or 1.5Ω - 10Ω
Withstand Voltage	3.0kV/1mA/1min
Impulse Insulation (BIL)	10kV
Insulation Resistance	50MΩ
Rated Continuous Thermal Current (I_{cth})	120% of Rated Current
SAFETY/COMPLIANCE	
Rated Voltage	600VAC, Rated CAT III
Certifications & Compliance	CE, RoHS, UL2808 Listed (E469633), IEC 61010-1, CAN/CSA-C61869-1/-2, CSA C22.2
Measurement Canada Approved	MC S-E-09 Class 0.15

Dimensions

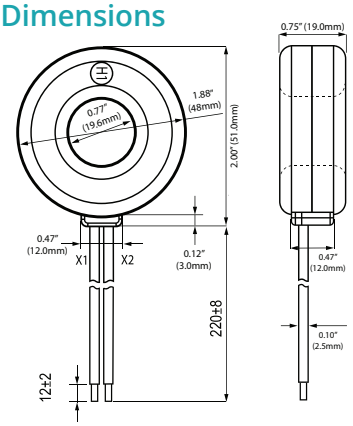

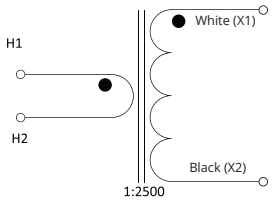

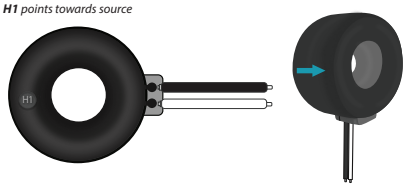

Ordering Information

	Model	-	*Rated Input*	:	*Rated Output*
	AcuCT-S77		100: 100A		80 mA
			200: 200A		100 mA
					333 mV
Ordering Example	**AcuCT-S77**	**-**	**100**	**:**	**100mA**