Compact Switch

Series 96201, 96211, 96221

Features

- Compact size
- Low & high pressures including vacuum
- Extremely versatile
- Optional DIN and conduit connectors
- NEMA 1 & 4; IP65
- Single pole double throw snap action switching
- Factory preset or field adjustable

Applications

- Pump & compressor monitoring
- Air proving in HVAC systems
- Engine monitoring
- Machine tools
- Hydraulic power units
- Mobile hydraulics
- Medical equipment
- Irrigation systems
- General industrial applications

General Specifications*

Accuracy:	± 2% of full range
Switch: Type: Rating:	 SPDT snap action; single circuit 5 Amp @ 125/250 VAC (Class BB microswitch - standard) 5 Amp @ 30 VDC (Class BB microswitches) (No agency)
Wetted Parts: Process Fitting: O-Ring Seals & Diaphragms: Piston (96201 models):	 Brass (standard) Buna-N (standard) Stainless steel; Teflon back-up ring
Electrical Connection:	12" free leads, #18 AWG (Standard)
Enclosure Ratings:	NEMA 1 (plastic - standard) NEMA 4 (when ordered with -T4 or -T5 options) IP65 (when ordered with T2 DIN connection option
Pressure Connection:	1/4" NPT male (standard)
Approvals: UL: CSA:	 UL recognized component (UR); With optional conduit connector (-T4 or -T5 option) becomes UL listed. UL File No. E42816. CSA #LR22355

Temperature Range: Series 96201: Series 96211: Series 96221:	 -40° to +165°F (-40° to +74°C) -20° to +165°F (-29° to +74°C) 0° to +165°F (-18° to +74°C)
Adjustment Capability:	Models L96201, L96211 and L96221 are factory set and permanently locked. Models 96201, 96211, and 96221 are field adjustable via an external adjustment sleeve.
Pressure Setpoint Adjustment:	Secure hex body with open-end wrench; hand turn adjustment sleeve: Clockwise (counterclockwise for vacuum models) to increase. Counterclockwise (clockwise for vacuum models) to decrease set point.
Shipping Weight:	Approximate 0.95 lbs.

Wiring Code

	PRESSURE		VACUUM	
LEAD	COLOR	PIN	COLOR	PIN
NORMALLY CLOSED	BLUE	2	RED	3
COMMON	PURPLE	1	PURPLE	1
NORMALLY OPEN	RED	3	BLUE	2

* See product configurator for additional options.

Technical Drawings

Dimensions in inches (mm)

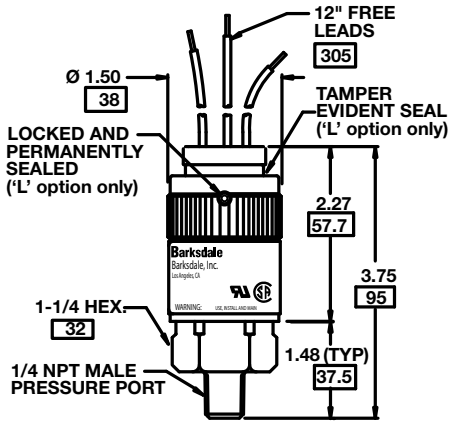

STANDARD MODEL

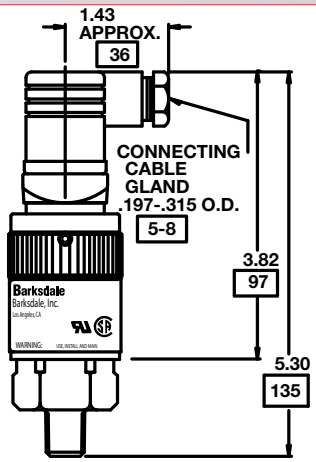

-T2 MODIFICATION

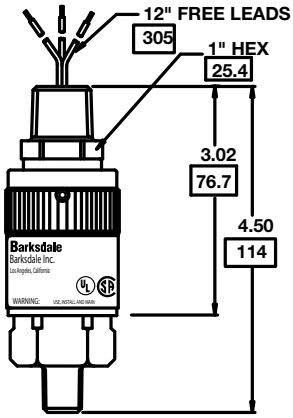

-T4 MODIFICATION

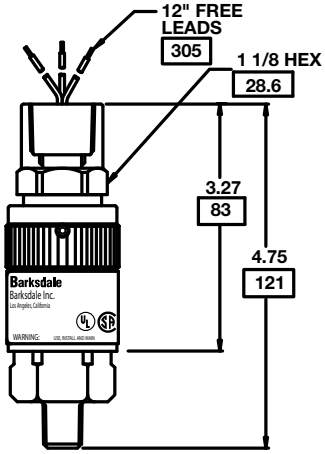

-T5 MODIFICATION

Product Configurator

Example:		96211-BB3	SS	-T5	-V	

Highlighted options represent those most frequently used. Select these common options for improved availability.

Prefix

L[5]	Factory set and permanently locked (optional)
T	Tamper resistant setscrew (optional)

Base Model

	Adjustable Range				Approx. Deadband	Proof	
	Decreasing - psi (bar)		Increasing - psi (bar)		(Actuation Value)	Pressure	
	Min.	Max.	Min.	Max.	psi (bar)	psi (bar)	
96221-BB1	1" Hg	28" Hg	6" Hg	30" Hg	.5 - 8" Hg	30 (2)" Hg	Vacuum
96211-BB1	2.5 (.2)	12.8 (.9)	3 (.2)	15 (1)	.3 - 3 (.02 - .21)	1000 (68)	Low Pressure Diaphragms
96211-BB2	5 (.3)	31 (2)	6 (.4)	35 (2.4)	.5 - 6 (.03 - .41)	1000 (68)	
96211-BB3	8.5 (.6)	44 (3)	10 (.6)	50 (3.4)	.5 - 8 (.03 - .55)	1000 (68)	
96211-BB4	22.5 (1.5)	112 (8)	25 (1.8)	125 (8.5)	1 - 15 (.07 - 1.03)	1000 (68)	
96211-BB5	70 (5)	220 (15)	80 (5.5)	250 (17)	5 - 40 (.34 - 2.76)	1000 (68)	
96211-BB6	110 (7)	440 (30)	130 (9)	500 (34)	10 - 75 (.69 - 5.17)	1000 (68)	
96201-BB1	190 (13)	450 (31)	250 (17)	600 (41)	30-150 (2.07 -10.35)	7000 (476)	High Pressure Piston
96201-BB2	360 (24)	1450 (105)	430 (29)	1700 (116)	40-400 (2.76 - 27.59)	7000 (476)	
96201-BB3	1450 (105)	3900 (265)	1650 (112)	4400 (300)	100-750 (6.90 - 51.72)	7000 (476)	
96201-BB4	3650 (248)	6700 (456)	4000 (272)	7500 (510)	200-1000 (13.79-68.96)	12000 (816)	
96201-BB5	300 (20)	2500 (170)	380 (26)	3000 (200)	80-500 (5.52-34.48)	7000 (476)	

Options

-Z1	Cleaned for oxygen service
-Z12	Gold contact limit switch, 1 A, 125 VAC
-Z17	DIN 43650 base only (no mating plug)
-P1	7/16-20 SAE pressure Fitting with O-ring
-WXXX[4]	Extra wire length (XXX = inches)
-SXXX	Factory preset (consult factory)

Fitting Option

Blank	Brass (Standard)

Electrical Connectors

Blank	12" free leads (standard)
-T2	DIN Connector, 43650A
-T4	1/2" NPT male conduit connector with free leads
-T5	1/2" NPT female conduit connector with free leads

Diaphragm/O-ring Material[2]

Blank	Buna-N (standard)
-V	Viton®

NOTES:

[1] Not available with 96221-BB1 or 96201-BB4 base models
[2] Not available with DIN connector (-T2 option)
[3] Requires selection of factory preset -SXXX option.

See Barksdale's Standard Conditions of Sale • Specifications are subject to modification at any time • Bulletin #S0073-M • 04/23 • ©2023 • Printed in the U.S.A.