Barksdale®
CONTROL PRODUCTS

Diaphragm Switch

D1S, D2S, D1H, D2H Series

Features

- Stripped and housed versions available
- High accuracy
- Ideal for pressure or vacuum
- Easy setpoint adjustment
- NEMA 4 (Housed Models)

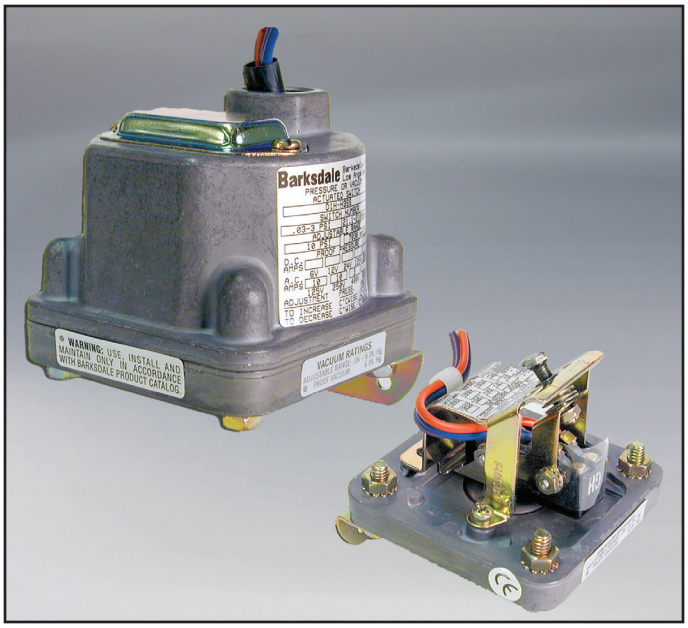

Applications

- Pump & compressor monitoring
- Engine monitoring
- Machine tools
- Hydraulic power units
- Medical equipment
- Waste management
- Food & beverage
- Factory automation
- Metal working

General Specifications*

Accuracy:	± 0.5% of the adjustable range
Switch: Type: Rating:	 Single pole double throw (SPDT) Snap Action; single or dual circuit 10 amps @ 125/250 VAC; 3 amps @ 480 VAC (Class A or H limit switch). Consult sales drawing for ratings of optional limit switches.
Wetted Parts: Process Fitting: Diaphragm: Enclosure:	 304 stainless steel 17-7 PH stainless steel Anodized aluminum (housed models)
Electrical Connection:	Free leads approximately 18" long, #16 AWG and 1/2" NPT conduit connection for housed models
Enclosure Ratings:	Housed Models: NEMA 4 Stripped Models: NEMA 1
Pressure Connection:	1/4" NPT Female
Approvals: UL (optional):	 Stripped (D1S and D2S) models may be ordered as UL Recognized components (UR) on request. Housed (D1H and D2H) models may be ordered as UL Listed on request (UL File No. E42816).

Approvals (cont.): CSA (optional):	 All models may be ordered as CSA listed under Class 3231 02, File LR22355 on request.
PED (European):	Compliant to PED 97/23/EC
Temperature Range: Operating:	 -40° to +165°F (-40° to +74°C)
Storage:	-65° to +200°F (-54° to +93°C)
Adjustment Instructions: Pressure:	 Turn adjustment screw counterclockwise to raise actuation point.
Vacuum:	Turn adjustment screw clockwise to increase setpoint (higher vacuum).
Options:	- NEMA 4X enclosure (housed models only) - Cleaned for oxygen service - Factory pre-set
Shipping Weight:	Stripped Versions: 1.5 lbs. approximate Housed Versions: 1.75 lbs. approximate

* See product configurator for additional options.

Wiring Code

Lead	Circuit #1		Circuit #2	
	Pressure	Vacuum	Pressure	Vacuum
Normally Closed	Blue	Red	Orange	Yellow
Common	Purple	Purple	Brown	Brown

Wiring Diagram

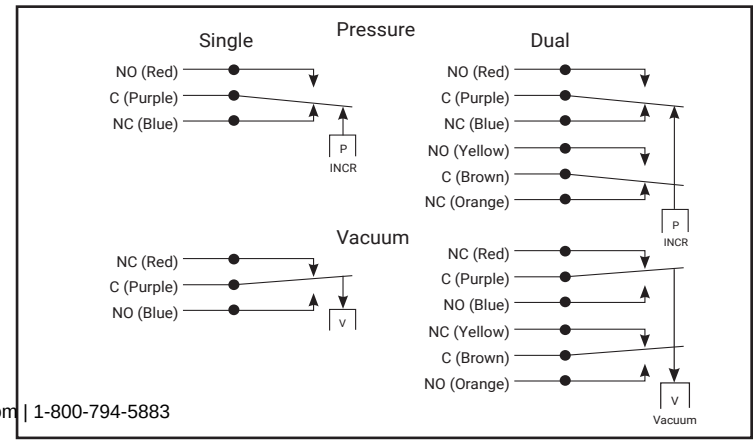

Technical Drawing

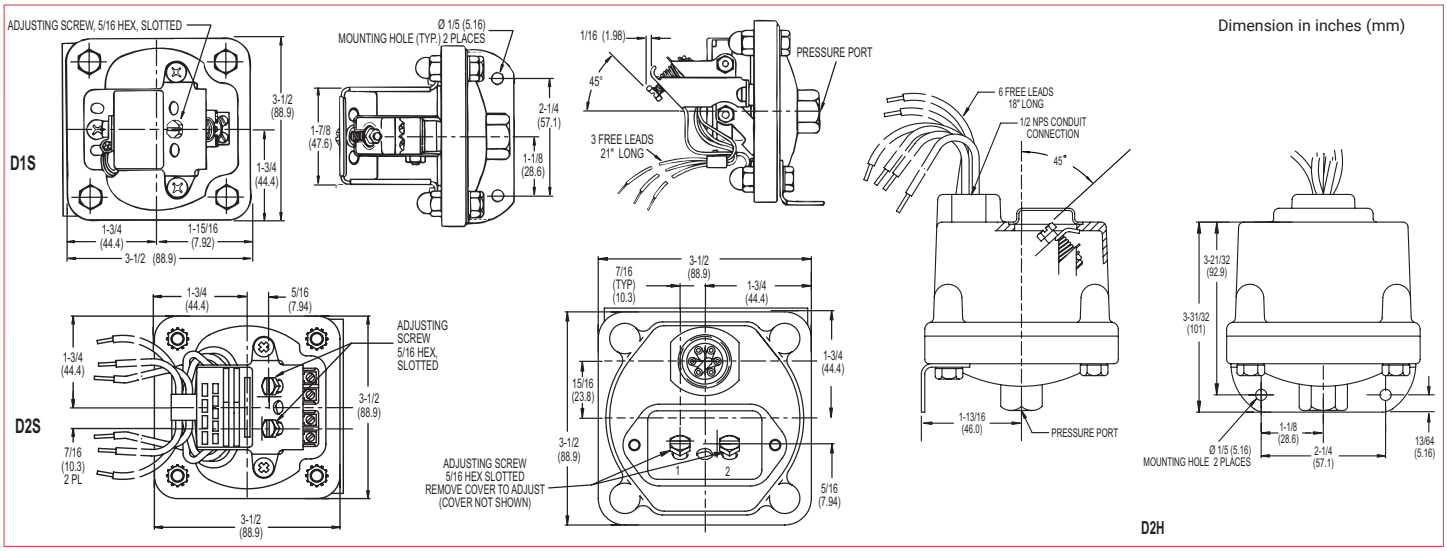

Product Configurator

Example		D1H	-A	80SS		-CS

* Highlighted options represent those most frequently used. Select these common options for improved availability. (5/21)

H	Hermetically sealed limit switch option - Class I, Division II (requires AA, CC, GH or HH limit switch; not available on vacuum models; no agency approval on D1S and D2S models)

Base Configuration

D1H	Single setpoint housed version
D1S	Single setpoint stripped version
D2H	Dual setpoint housed version
D2S	Dual setpoint stripped version

Limit Switch[1]

-A[4]	10 amps @ 125/250 VAC; 3 amps @ 480 VAC; (standard for pressure range 3SS, 80SS or 150SS)
-H	10 amps @ 125/250 VAC; 3 amps @ 480 VAC; (standard for pressure range 2SS or 18SS)
-M	10 amps @ 125/250 VAC; 3 amps @ 480 VAC; 0.5 amps @ 125 VDC; 0.25 amps @ 250 VDC (not UL approved)
-GH	1 Amp @ 125 VAC; 1 Amp @ 24 VDC with gold contacts (not UL approved)
-CC	Hermetically sealed; 10 amps @ 125/250 VAC (not available on 2SS or vacuum models)
-HH	Hermetically sealed; 5 amps @ 125/250 VAC (not available on 2SS or vacuum models)

Options

-FX	NEMA 4X enclosure
-Z1	Oxygen cleaned
-U	UL Approved (Industrial Control)
-CS	CSA Approved Model
-Wxxx	Extra wire length (XXX = inches)
-Sxxx	Factory pre-set (consult factory)

Pressure Connection

Blank	Std 1/4" NPT female pressure connection

Adjustable Range

	Adjustable Range (PRESSURE)				Approx. Deadband[2] (Actuation Value) psi (bar)	Proof Pressure psi (bar)
	Decreasing - psi (bar)		Increasing - psi (bar)			
	Min	Max	Min	Max		
2SS[3]	0.018 (.0)	1.65 (.1)	0.068 (.0)	1.7 (.1)	.02 - .05 (.0 - .0)	3 (.2)
3SS	.03 (.00)	2.85 (.2)	.18 (.02)	3 (.2)	.07 - .15 (.0 - .01)	10 (.7)
18SS	.4 (.03)	17.74 (1.2)	.66 (.05)	18 (1.2)	.12 - .26 (.01 - .02)	60 (4.1)
80SS	.5 (.03)	76.6 (5.3)	3.9 (.3)	80 (5.5)	1.6 - 3.4 (.1 - .2)	160 (10.9)
150SS	1.5 (.1)	144 (9.9)	7.5 (.5)	150 (10.3)	2.3 - 6 (.2 - .4)	300 (20.4)

	Adjustable Range (VACUUM)				Approx. Deadband[2] (Actuation Value) In. Hg	Proof Pressure In. Hg
	Decreasing - In. Hg		Increasing - In. Hg			
	Min	Max	Min	Max		
3SS	0.06	5.72	0.34	6	.14 - .28	20

NOTES:
[1] Consult Supplemental Guide for specific deadband values
[2] Deadband values indicated when used with the "standard" limit switch
[3] Not available with hermetically sealed limit switches (no CSA)
[4] A limit switch not available with UL/CSA

See Barksdale's Standard Conditions of Sale • Specifications are subject to modification at any time • Bulletin #S0081-I • 03/24 • ©2024 • Printed in the U.S.A.