# Terminal Block Diaphragm Switch

## D1T, D2T Series

## Features

- High reliability
- High accuracy
- NEMA 4
- Ideal for pressure and vacuum applications
- Single and dual switching capability
- Tamper-proof external adjustment

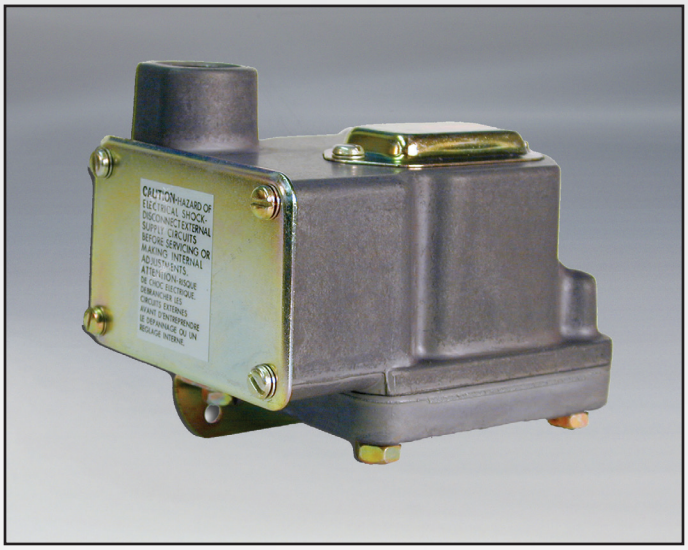

## Applications

- Machine tools
- Pneumatics
- Medical
- Marine & shipbuilding
- Pump & compressor monitoring
- Oil & gas
- Water equipment
- Mining
- Lubrication equipment

## General Specifications*

| | |
|---|---|
| Accuracy: | ± 0.5% of the adjustable range |
| Switch:<br>Type:<br><br>Rating: | <br>Single pole double throw (SPDT) Snap Action; single circuit<br><br>10 amps @ 125/250 VAC; 3 amps @ 480 VAC (Class A or H limit switch). Consult sales drawing for ratings of optional limit switches. |
| Wetted Parts:<br>Process Fitting:<br><br>Diaphragm:<br><br>Enclosure: | <br>304 stainless steel<br><br>17-7 PH stainless steel<br><br>Anodized aluminum |
| Electrical Connection: | Terminal block through 1/2" NPT conduit connector |
| Enclosure Rating: | NEMA 4 |
| Pressure Connection: | 1/4" NPT Female |
| Approvals:<br>UL (Optional):<br><br><br><br><br>CSA (Optional): | <br>D1T models may be ordered as UL listed on request. D2T models may be ordered as UL Recognized components on request. File No. E42816<br><br>All models may be ordered as CSA listed under Class 3231 02, File LR22355 on request. |

* See product configurator for additional options.

| | |
|---|---|
| Approvals (cont.):<br>PED (European): | <br>Compliant to PED 97/23/EC |
| Temperature Range:<br>Operating:<br><br><br><br>Storage: | <br>-40° to +165°F (-40° to +74°C)<br>Hermetic Div. 2 models:<br>-4° to +140°F (-20° to +60 °C)<br><br>-65° to +200°F (-54° to +93°C) |
| Adjustment Instructions:<br>Pressure:<br><br><br>Vacuum: | <br>Turn adjustment screw counterclockwise to raise actuation point.<br><br>Turn adjustment screw clockwise to increase setpoint (higher vacuum). |
| Options: | - NEMA 4X enclosure<br>- Cleaned for oxygen service<br>- Factory pre-set<br>- Six-pin terminal block |
| Shipping Weight: | 2.0 lbs. approximate |

## Wiring Diagram

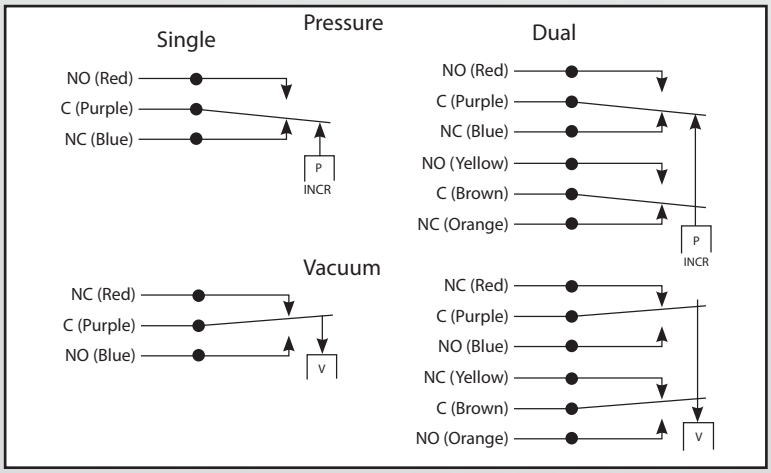


## Wiring Code

| Lead | Circuit #1 | | Circuit #2 | |
|---|---|---|---|---|
| | Pressure | Vacuum | Pressure | Vacuum |
| Normally Closed | Blue | Red | Orange | Yellow |
| Common | Purple | Purple | Brown | Brown |
| Normally Open | Red | Blue | Yellow | Orange |

# Terminal Block Diaphragm Switch

# D1T, D2T Series

## Technical Drawing

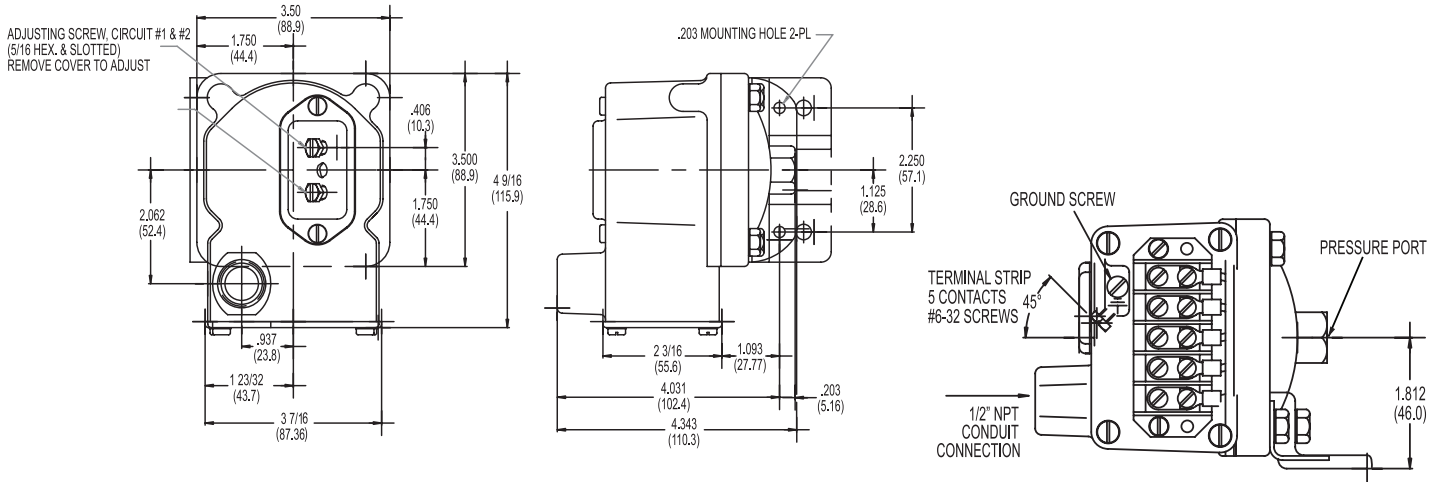


Dimension in inches (mm)

## Product Configurator

| Example | | D1T | -A | 80SS | | -U |
|---|---|---|---|---|---|---|

| | |
|---|---|
| H | Hermetically sealed limit switch option - Class I, Division II (requires AA, CC, GH or HH limit switch) |

* Highlighted options represent those most frequently used. Select these common options for improved availability. (5/21)

### Base Configuration

| | |
|---|---|
| D1T | Single setpoint housed with terminal block |
| D2T | Dual setpoint housed with terminal block |

### Limit Switch[1]

| | |
|---|---|
| -A[4] | 10 amps @ 125/250 VAC; 3 amps @ 480 VAC; (standard for pressure range 3SS, 80SS or 150SS) |
| -C | 10 amps @ 125/250/480 VAC; 2 amps @ 600 VAC; 0.1 amps @ 125 VDC; 0.05 amps @ 250 VDC |
| -H | 10 amps @ 125/250 VAC; 3 amps @ 480 VAC; (standard for pressure range 2SS or 18SS) |
| -M | 10 amps @ 125/250 VAC; 3 amps @ 480 VAC; 0.5 amps @ 125 VDC; 0.25 amps @ 250 VDC (not -U or -UL approved) |
| -GH | 1 amp @ 125 VAC; 1 amp @ 24 VDC with gold contacts |
| -CC | Hermetically sealed; 10 amps @ 125/250 VAC (not available on 2SS or vacuum models) |
| -HH | Hermetically sealed; 5 amps @ 125/250 VAC (not available on 2SS or vacuum models) |

### Options

| | |
|---|---|
| -U | UL Approved (Industrial Control) |
| -CS | CSA Approved Model |
| -Z1[3] | Oxygen cleaned |
| -FX | NEMA 4X enclosure |
| -TC | Temperature stabilization and pre-cycle (non-agency) |
| -L6 | 6-Pin Terminal Block (for D2T models only. Non-UL listed) |
| -Sxxx | Factory pre-set (consult factory) |

### Pressure Connection

| | |
|---|---|
| Blank | Std 1/4" NPT female pressure connection |

### Adjustable Range

| | Adjustable Range (PRESSURE) | | | | Approx. Deadband[2] (Actuation Value) psi (bar) | Proof Pressure psi (bar) |
|---|---|---|---|---|---|---|
| | Decreasing - psi (bar) | | Increasing - psi (bar) | | | |
| | Min | Max | Min | Max | | |
| 2SS[3] | 0.018 (.0) | 1.65 (.1) | 0.068 (.0) | 1.7 (.1) | .02 - .05 (.0 - .0) | 3 (.2) |
| 3SS | .03 (.00) | 2.85 (.2) | .18 (.02) | 3 (.2) | .07 - .15 (.0 - .01) | 10 (.7) |
| 18SS | .4 (.03) | 17.74 (1.2) | .66 (.05) | 18 (1.2) | .12 - .26 (.01 - .02) | 60 (4.1) |
| 80SS | .5 (.03) | 76.6 (5.3) | 3.9 (.3) | 80 (5.5) | 1.6 - 3.4 (.1 - .2) | 160 (10.9) |
| 150SS | 1.5 (.1) | 144 (9.9) | 7.5 (.5) | 150 (10.3) | 2.3 - 6 (.2 - .4) | 300 (20.4) |

| | Adjustable Range (VACUUM) | | | | Approx. Deadband[2] (Actuation Value) In. Hg | Proof Pressure In. Hg |
|---|---|---|---|---|---|---|
| | Decreasing - In. Hg | | Increasing - In. Hg | | | |
| | Min | Max | Min | Max | | |
| 3SS | 0.06 | 5.72 | 0.34 | 6 | .14 - .28 | 6 |
| 18SS | 0.8 | 29.2 | 1.6 | 30 | .4 - .8 | 30 |

NOTES:

[1] Consult Supplemental Guide for specific deadband values

[2] Deadband values indicated when used with the standard "H" limit switch

[3] Not available with hermetically sealed limit switches (no CSA)

[4] A limit switch does not have UL/CSA

MOD-TRONIC Instruments Limited | www.mod-tronic.com | sales@mod-tronic.com | 1-800-794-5883

Barksdale® CONTROL PRODUCTS