ACCUENERGY

Shunt Series

DC Current Shunt



DATASHEET

Shunt Series

Shunt-50A

DC Current Shunt Datasheet

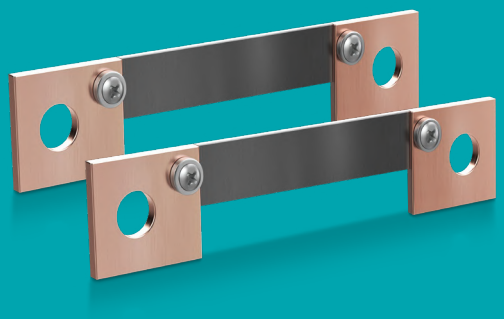

Accuenergy DC current shunts are engineered for precision measurement in DC current systems. Designed to connect to a DC power meter to measure electrical currents based on a small voltage drop, DC current shunts provide accurate energy measurements in a variety of applications including renewable energy, mass transit, battery charging, electric vehicles, welding, heavy industrial environments, and OEM applications.

Features

- Accuracy class: 0.1%
- 75mV voltage drop

RoHS COMPLIANT

Mod-Tronic Instruments Ltd.
1-800-794-5883
www.mod-tronic.com
sales@mod-tronic.com

Revision Date: September 2024 Version: 1.0.0
Specs Subject To Change Without Notice.

ACCUENERGY

Specifications

RATED CURRENT	50A
Current Range	10-120% of rated current
Accuracy	0.1%
Voltage Drop	75mV
MECHANICAL/ENVIRONMENTAL	
Form Factor	Inline installation
Exterior Dimensions	104.0mm x 21.5mm x 2.0mm 4.09" x 0.85" x 0.08"
Case Material	Manganin Alloy
Operating Temperature	-40°C to 80°C / -40°F to 176°F
Shunt Temperature w/ Load Current	<80% of rated current = 80°C (176°F), >120% = of rated current = 120°C (248°F)
Storage Temperature	-55°C to 85°C / -67°F to 185°F
Operating Humidity	Non-condensing, 0 to 95% RH
Installation Conditions	Indoor Use
ELECTRICAL	
Frequency Range	DC
SAFETY/COMPLIANCE	
Overload	120% of nominal current (2 hours)
Certifications	RoHS

Dimensions

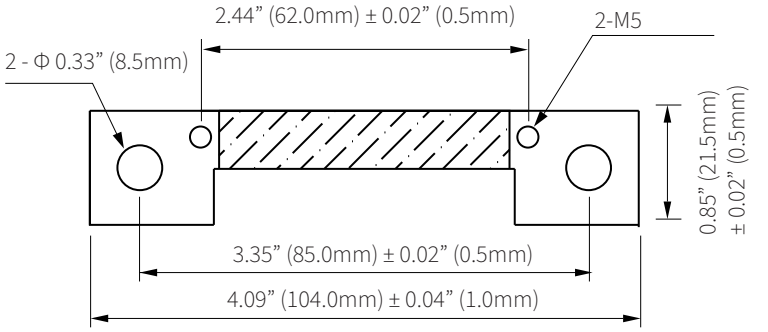

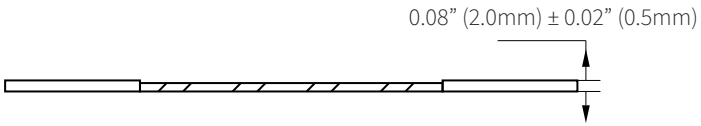

Ordering Information

			Rated Input		*Voltage Drop*
Ordering Number	Shunt	-		/	
Ordering Example	**Shunt**	**-**	**50A**	**/**	**75mV**
			50A		75mV

Shunt Series

Shunt-100A

DC Current Shunt Datasheet



Accuenergy DC current shunts are engineered for precision measurement in DC current systems. Designed to connect to a DC power meter to measure electrical currents based on a small voltage drop, DC current shunts provide accurate energy measurements in a variety of applications including renewable energy, mass transit, battery charging, electric vehicles, welding, heavy industrial environments, and OEM applications.

Features

- Accuracy class: 0.1%
- 75mV voltage drop

RoHS COMPLIANT

Mod-Tronic Instruments Ltd.
1-800-794-5883
www.mod-tronic.com
sales@mod-tronic.com

Revision Date: August 2024 Version: 1.0.3
Specs Subject To Change Without Notice.

ACCUENERGY

Specifications

RATED CURRENT	100A
Current Range	10-120% of rated current
Accuracy	0.1%
Voltage Drop	75mV
MECHANICAL/ENVIRONMENTAL	
Form Factor	Inline installation
Exterior Dimensions	104.0mm x 21.5mm x 2.0mm 4.09" x 0.85" x 0.08"
Case Material	Manganin Alloy
Operating Temperature	-40°C to 80°C / -40°F to 176°F
Shunt Temperature w/ Load Current	<80% of rated current = 80°C (176°F), >120% = of rated current = 120°C (248°F)
Storage Temperature	-55°C to 85°C / -67°F to 185°F
Operating Humidity	Non-condensing, 0 to 95% RH
Installation Conditions	Indoor Use
ELECTRICAL	
Frequency Range	DC
SAFETY/COMPLIANCE	
Overload	120% of nominal current (2 hours)
Certifications	RoHS

Dimensions

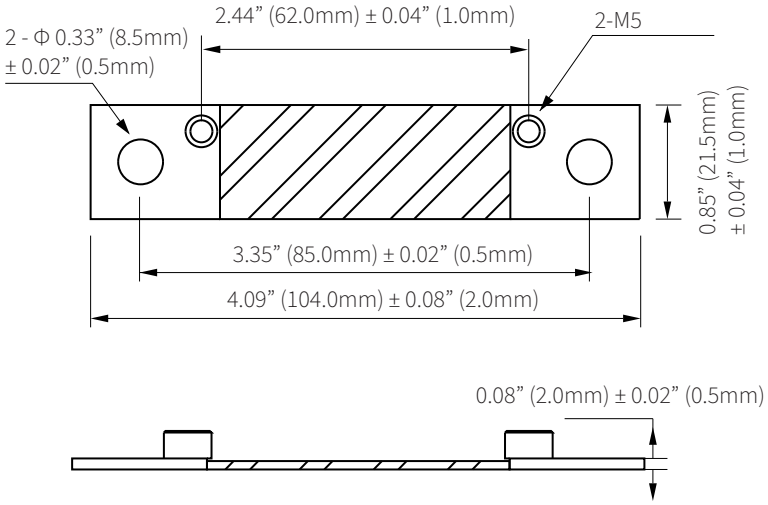

Ordering Information

			Rated Input		*Voltage Drop*
Ordering Number	Shunt	-		/	
Ordering Example	**Shunt**	**-**	**100A**	**/**	**75mV**
			100A		75mV

Shunt Series

Shunt-200A

DC Current Shunt Datasheet

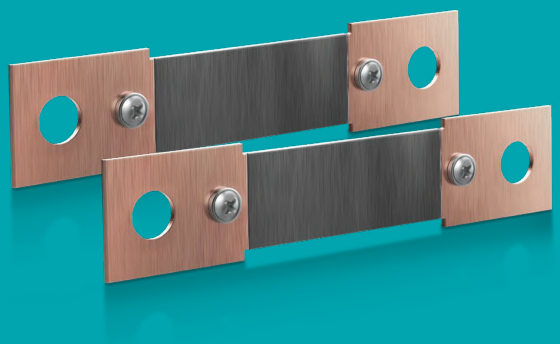

Accuenergy DC current shunts are engineered for precision measurement in DC current systems. Designed to connect to a DC power meter to measure electrical currents based on a small voltage drop, DC current shunts provide accurate energy measurements in a variety of applications including renewable energy, mass transit, battery charging, electric vehicles, welding, heavy industrial environments, and OEM applications.

Features

- Accuracy class: 0.1%
- 75mV voltage drop

RoHS COMPLIANT

Mod-Tronic Instruments Ltd.
1-800-794-5883
www.mod-tronic.com
sales@mod-tronic.com

Revision Date: August 2024 Version: 1.0.3
Specs Subject To Change Without Notice.

ACCUENERGY

Specifications

RATED CURRENT	200A
Current Range	10-120% of rated current
Accuracy	0.1%
Voltage Drop	75mV
MECHANICAL/ENVIRONMENTAL	
Form Factor	Inline installation
Exterior Dimensions	104.0mm x 22.0mm x 3.0mm 4.09" x 0.87" x 0.12"
Case Material	Manganin Alloy
Operating Temperature	-40°C to 80°C / -40°F to 176°F
Shunt Temperature w/ Load Current	<80% of rated current = 80°C (176°F), >120% = of rated current = 120°C (248°F)
Storage Temperature	-55°C to 85°C / -67°F to 185°F
Operating Humidity	Non-condensing, 0 to 95% RH
Installation Conditions	Indoor Use
ELECTRICAL	
Frequency Range	DC
SAFETY/COMPLIANCE	
Overload	120% of nominal current (2 hours)
Certifications	RoHS

Dimensions

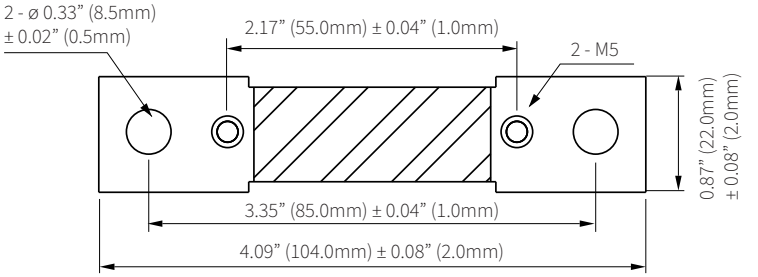

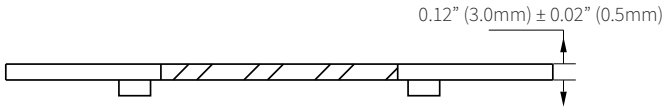

Ordering Information

			Rated Input		*Voltage Drop*
Ordering Number	Shunt	-		/	
Ordering Example	**Shunt**	**-**	**200A**	**/**	**75mV**
			200A		75mV

Shunt Series

Shunt-300A

DC Current Shunt Datasheet

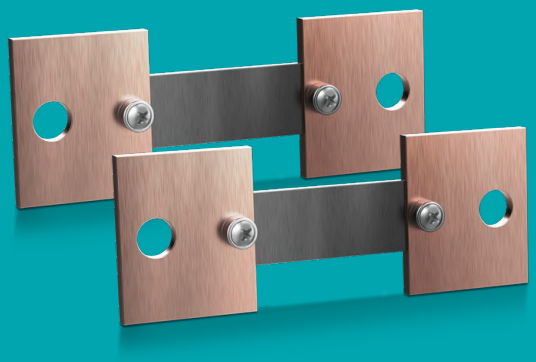

Accuenergy DC current shunts are engineered for precision measurement in DC current systems. Designed to connect to a DC power meter to measure electrical currents based on a small voltage drop, DC current shunts provide accurate energy measurements in a variety of applications including renewable energy, mass transit, battery charging, electric vehicles, welding, heavy industrial environments, and OEM applications.

Features

- Accuracy class: 0.1%
- 75mV voltage drop

RoHS COMPLIANT

Mod-Tronic Instruments Ltd.
1-800-794-5883
www.mod-tronic.com
sales@mod-tronic.com

Revision Date: August 2024 Version: 1.0.0
Specs Subject To Change Without Notice.

ACCUENERGY

Specifications

RATED CURRENT	300A
Current Range	10-120% of rated current
Accuracy	0.1%
Voltage Drop	75mV
MECHANICAL/ENVIRONMENTAL	
Form Factor	Inline installation
Exterior Dimensions	120.0mm x 45.0mm x 4.0mm 4.72" x 1.77" x 0.16"
Case Material	Manganin Alloy
Operating Temperature	-40°C to 80°C / -40°F to 176°F
Shunt Temperature with Load Current	<80% of rated current = 80°C (176°F), >120% = of rated current = 120°C (248°F)
Storage Temperature	-55°C to 85°C / -67°F to 185°F
Operating Humidity	Non-condensing, 0 to 95% RH
Installation Conditions	Indoor Use
ELECTRICAL	
Frequency Range	DC
SAFETY/COMPLIANCE	
Overload	120% of nominal current (2 hours)
Certifications	RoHS

Dimensions

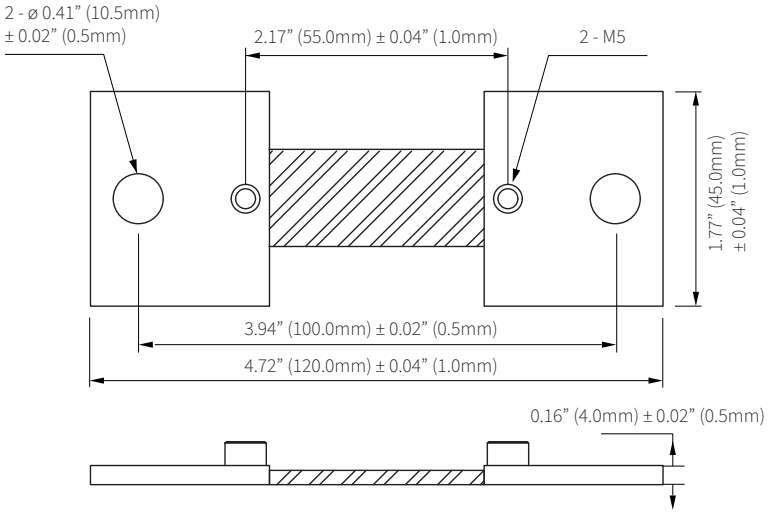

Ordering Information

			Rated Input		*Voltage Drop*
Ordering Number	Shunt	-		/	
Ordering Example	**Shunt**	**-**	**300A**	**/**	**75mV**
			300A		75mV

Shunt Series

Shunt-400A

DC Current Shunt Datasheet

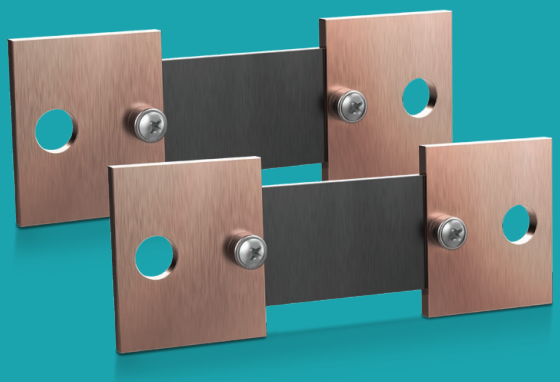

Accuenergy DC current shunts are engineered for precision measurement in DC current systems. Designed to connect to a DC power meter to measure electrical currents based on a small voltage drop, DC current shunts provide accurate energy measurements in a variety of applications including renewable energy, mass transit, battery charging, electric vehicles, welding, heavy industrial environments, and OEM applications.

Features

- Accuracy class: 0.1%
- 75mV voltage drop

RoHS COMPLIANT

Mod-Tronic Instruments Ltd.
1-800-794-5883
www.mod-tronic.com
sales@mod-tronic.com

Revision Date: June 2026 Version: 1.0.1
Specs Subject To Change Without Notice.

ACCUENERGY

Specifications

RATED CURRENT	400A
Current Range	10-120% of rated current
Accuracy	0.1%
Voltage Drop	75mV
MECHANICAL/ENVIRONMENTAL	
Form Factor	Inline installation
Exterior Dimensions	120.0mm x 45.0mm x 4.0mm 4.72" x 1.77" x 0.16""
Case Material	Manganin Alloy
Operating Temperature	-40°C to 80°C / -40°F to 176°F
Shunt Temperature with Load Current	<80% of rated current = 80°C (176°F), >120% = of rated current = 120°C (248°F)
Storage Temperature	-55°C to 85°C / -67°F to 185°F
Operating Humidity	Non-condensing, 0 to 95% RH
Installation Conditions	Indoor Use
ELECTRICAL	
Frequency Range	DC
SAFETY/COMPLIANCE	
Overload	120% of nominal current (2 hours)
Certifications	RoHS

Dimensions

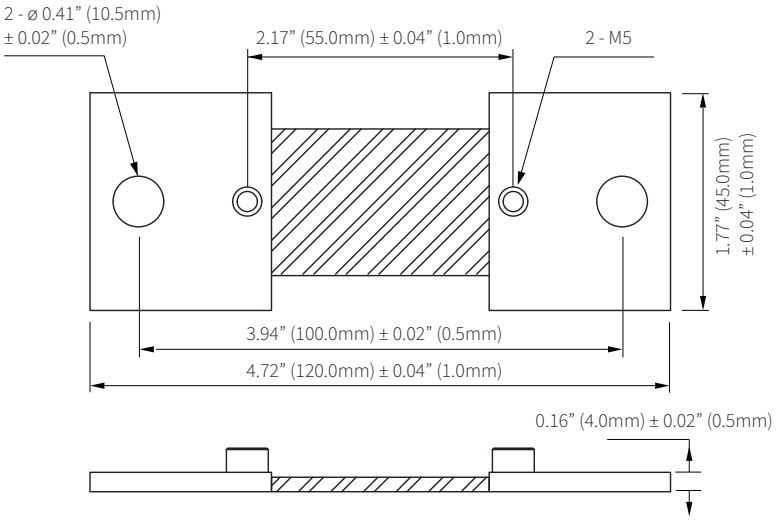

Ordering Information

			Rated Input		*Voltage Drop*
Ordering Number	Shunt	-		/	
Ordering Example	**Shunt**	**-**	**400A**	**/**	**75mV**
			400A		75mV

Shunt Series

Shunt-500A

DC Current Shunt Datasheet

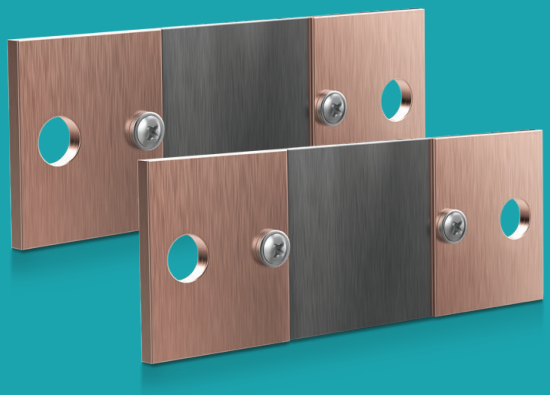

Accuenergy DC current shunts are engineered for precision measurement in DC current systems. Designed to connect to a DC power meter to measure electrical currents based on a small voltage drop, DC current shunts provide accurate energy measurements in a variety of applications including renewable energy, mass transit, battery charging, electric vehicles, welding, heavy industrial environments, and OEM applications.

Features

- Accuracy class: 0.1%
- 75mV voltage drop

RoHS COMPLIANT

Mod-Tronic Instruments Ltd.
1-800-794-5883
www.mod-tronic.com
sales@mod-tronic.com

Revision Date: June 2026 Version: 1.0.4
Specs Subject To Change Without Notice.

ACCUENERGY

Specifications

RATED CURRENT	500A
Current Range	10-120% of rated current
Accuracy	0.1%
Voltage Drop	75mV
MECHANICAL/ENVIRONMENTAL	
Form Factor	Inline installation
Exterior Dimensions	120.0mm x 45.0mm x 4.0mm 4.72" x 1.77" x 0.16""
Case Material	Manganin Alloy
Operating Temperature	-40°C to 80°C / -40°F to 176°F
Shunt Temperature w/ Load Current	<80% of rated current = 80°C (176°F), >120% = of rated current = 120°C (248°F)
Storage Temperature	-55°C to 85°C / -67°F to 185°F
Operating Humidity	Non-condensing, 0 to 95% RH
Installation Conditions	Indoor Use
ELECTRICAL	
Frequency Range	DC
SAFETY/COMPLIANCE	
Overload	120% of nominal current (2 hours)
Certifications	RoHS

Dimensions

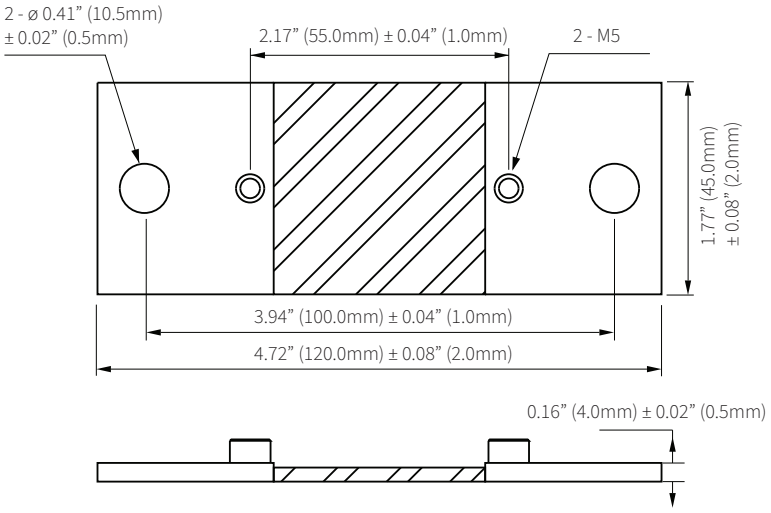

Ordering Information

			Rated Input		*Voltage Drop*
Ordering Number	Shunt	-		/	
Ordering Example	**Shunt**	**-**	**500A**	**/**	**75mV**
			500A		75mV

Shunt Series

Shunt-600A

DC Current Shunt Datasheet

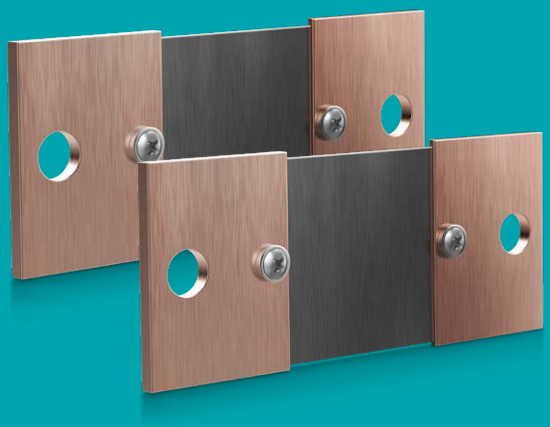

Accuenergy DC current shunts are engineered for precision measurement in DC current systems. Designed to connect to a DC power meter to measure electrical currents based on a small voltage drop, DC current shunts provide accurate energy measurements in a variety of applications including renewable energy, mass transit, battery charging, electric vehicles, welding, heavy industrial environments, and OEM applications.

Features

- Accuracy class: 0.1%
- 75mV voltage drop

RoHS COMPLIANT

Mod-Tronic Instruments Ltd.
1-800-794-5883
www.mod-tronic.com
sales@mod-tronic.com

Revision Date: September 2024 Version: 1.0.0
Specs Subject To Change Without Notice.

ACCUENERGY

Specifications

RATED CURRENT	600A
Current Range	10-120% of rated current
Accuracy	0.1%
Voltage Drop	75mV
MECHANICAL/ENVIRONMENTAL	
Form Factor	Inline installation
Exterior Dimensions	120.0mm x 62.0mm x 4.0mm 4.72" x 2.44" x 0.16"
Case Material	Manganin Alloy
Operating Temperature	-40°C to 80°C / -40°F to 176°F
Shunt Temperature w/ Load Current	<80% of rated current = 80°C (176°F), >120% = of rated current = 120°C (248°F)
Storage Temperature	-55°C to 85°C / -67°F to 185°F
Operating Humidity	Non-condensing, 0 to 95% RH
Installation Conditions	Indoor Use
ELECTRICAL	
Frequency Range	DC
SAFETY/COMPLIANCE	
Overload	120% of nominal current (2 hours)
Certifications	RoHS

Dimensions

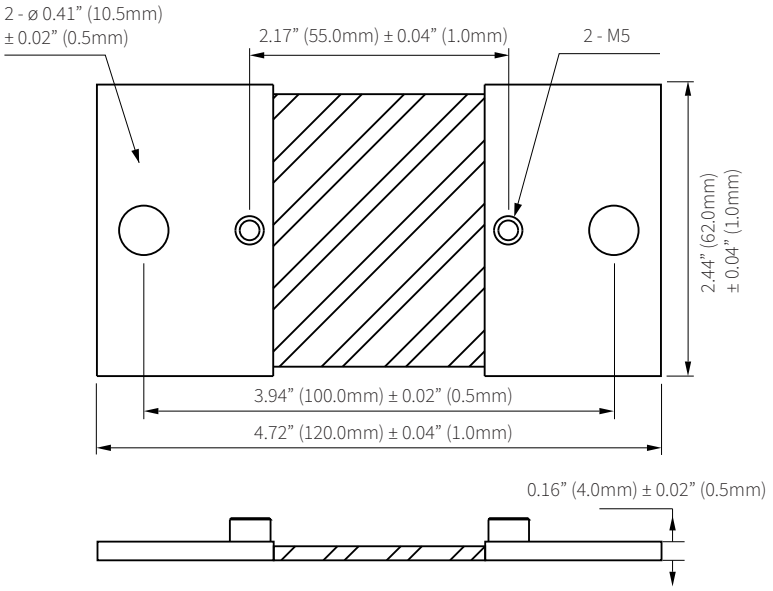

Ordering Information

			Rated Input		*Voltage Drop*
Ordering Number	Shunt	-		/	
Ordering Example	**Shunt**	**-**	**600A**	**/**	**75mV**
			600A		75mV

Shunt Series

Shunt-1000A

DC Current Shunt Datasheet



Accuenergy DC current shunts are engineered for precision measurement in DC current systems. Designed to connect to a DC power meter to measure electrical currents based on a small voltage drop, DC current shunts provide accurate energy measurements in a variety of applications including renewable energy, mass transit, battery charging, electric vehicles, welding, heavy industrial environments, and OEM applications.

Features

- Accuracy class: 0.2%
- 75mV voltage drop

RoHS COMPLIANT

Mod-Tronic Instruments Ltd.
1-800-794-5883
www.mod-tronic.com
sales@mod-tronic.com

Revision Date: March 2024 Version: 1.0.3
Specs Subject To Change Without Notice.

ACCUENERGY

Specifications

RATED CURRENT	1000A
Current Range	10-120% of rated current
Accuracy	0.2%
Voltage Drop	75mV
MECHANICAL/ENVIRONMENTAL	
Form Factor	Inline installation
Exterior Dimensions	125.0mm x 70.0mm x 21.0mm 4.92" x 2.76" x 0.83"
Case Material	Manganin Alloy
Operating Temperature	-40°C to 80°C / -40°F to 176°F
Shunt Temperature w/ Load Current	<80% of rated current = 80°C (176°F), >120% = of rated current = 120°C (248°F)
Storage Temperature	-55°C to 85°C / -67°F to 185°F
Operating Humidity	Non-condensing, 0 to 95% RH
Installation Conditions	Indoor Use
ELECTRICAL	
Frequency Range	DC
SAFETY/COMPLIANCE	
Overload	120% of nominal current (2 hours)
Certifications	RoHS

Dimensions

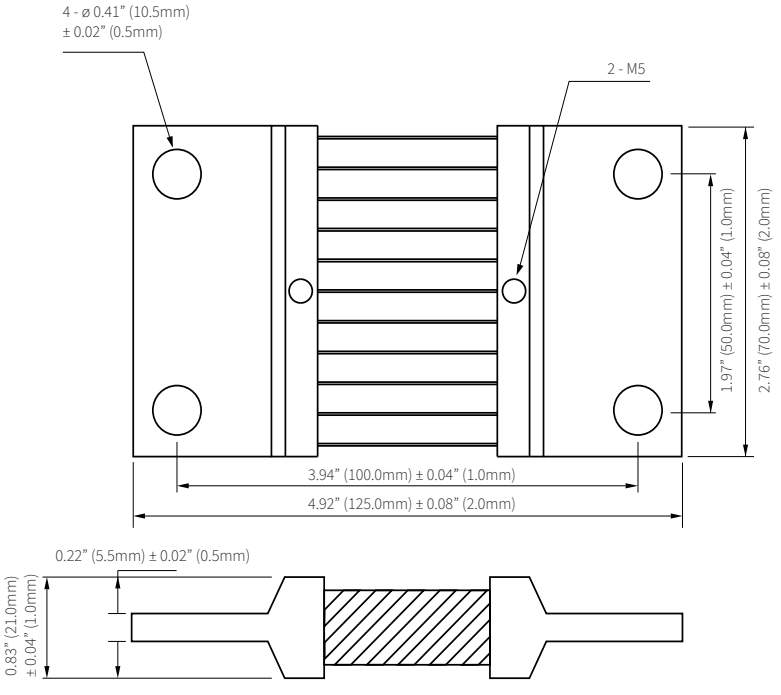

Ordering Information

			Rated Input		*Voltage Drop*
Ordering Number	Shunt	-		/	
Ordering Example	**Shunt**	**-**	**1000A**	**/**	**75mV**
			1000A		75mV

Shunt Series

Shunt-1500A

DC Current Shunt Datasheet



Accuenergy DC current shunts are engineered for precision measurement in DC current systems. Designed to connect to a DC power meter to measure electrical currents based on a small voltage drop, DC current shunts provide accurate energy measurements in a variety of applications including renewable energy, mass transit, battery charging, electric vehicles, welding, heavy industrial environments, and OEM applications.

Features

- Accuracy Class: 0.5%
- 75 mV Voltage Drop

RoHS COMPLIANT

Mod-Tronic Instruments Ltd.
1-800-794-5883
www.mod-tronic.com
sales@mod-tronic.com

Revision Date: June 2026 Version: 1.0.1
Specs Subject To Change Without Notice.

ACCUENERGY

Specifications

RATED CURRENT	1500 A
Current Range	10 % - 120 % of Rated Current
Accuracy	0.5 %
Voltage Drop	75 mV
MECHANICAL/ENVIRONMENTAL	
Form Factor	Inline Installation
Exterior Dimensions	125.0 mm × 100.0 mm × 20.0 mm (4.92″ × 3.94″ × 0.79″)
Case Material	Manganin Alloy
Operating Temperature	-40°C to 80°C / -40°F to 176°F
Shunt Temperature with Load Current	80°C (176°F) at < 80% of Rated Current 120°C (248°F) at ≥ 120% of Rated Current
Storage Temperature	-55°C to 85°C / -67°F to 185°F
Operating Humidity	Non-Condensing, 0% to 95% RH
Installation Conditions	Indoor Use
ELECTRICAL	
Frequency Range	DC
SAFETY/COMPLIANCE	
Overload	120% of Nominal Current (2 hours)
Certifications	RoHS

Dimensions

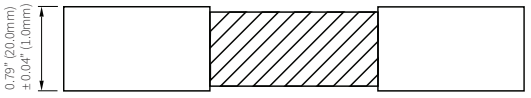

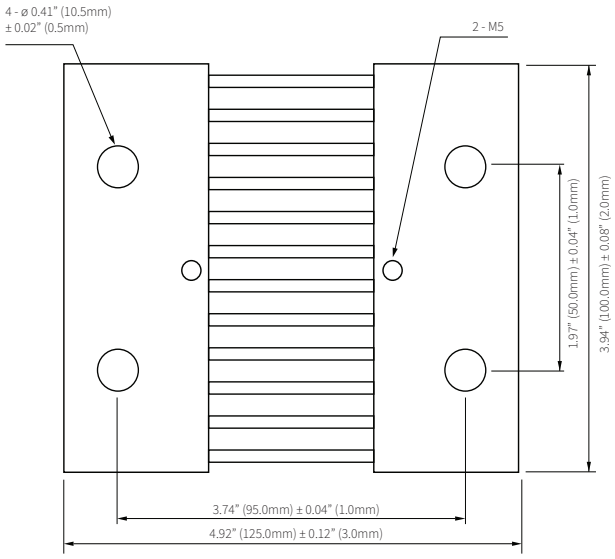

Ordering Information

	Model	-	*Rated Input*	/	*Voltage Drop*
	Shunt		1500A		75mV
Ordering Example	**Shunt**	**-**	**1500A**	**/**	**75mV**

Shunt Series

Shunt-2000A

DC Current Shunt Datasheet



Accuenergy DC current shunts are engineered for precision measurement in DC current systems. Designed to connect to a DC power meter to measure electrical currents based on a small voltage drop, DC current shunts provide accurate energy measurements in a variety of applications including renewable energy, mass transit, battery charging, electric vehicles, welding, heavy industrial environments, and OEM applications.

Features

- Accuracy class: 0.5%
- 75mV voltage drop

RoHS COMPLIANT

Mod-Tronic Instruments Ltd.
1-800-794-5883
www.mod-tronic.com
sales@mod-tronic.com

Revision Date: September 2024 Version: 1.0.4
Specs Subject To Change Without Notice.

ACCUENERGY

Specifications

RATED CURRENT	2000A
Current Range	10-120% of rated current
Accuracy	0.5%
Voltage Drop	75mV
MECHANICAL/ENVIRONMENTAL	
Form Factor	Inline installation
Exterior Dimensions	200.0mm x 84.0mm x 97.0mm 7.87" x 3.31" x 3.82"
Case Material	Manganin Alloy
Operating Temperature	-40°C to 80°C / -40°F to 176°F
Shunt Temperature w/ Load Current	<80% of rated current = 80°C (176°F), >120% = of rated current = 120°C (248°F)
Storage Temperature	-55°C to 85°C / -67°F to 185°F
Operating Humidity	Non-condensing, 0 to 95% RH
Installation Conditions	Indoor Use
ELECTRICAL	
Frequency Range	DC
SAFETY/COMPLIANCE	
Overload	120% of nominal current (2 hours)
Certifications	RoHS

Dimensions

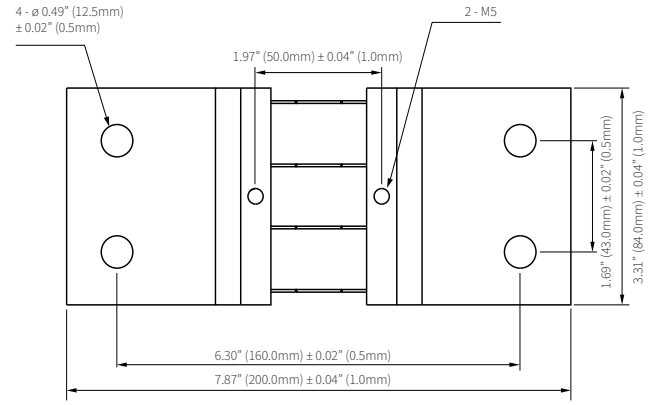

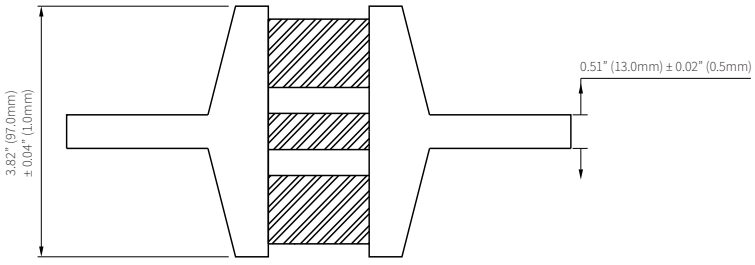

Ordering Information

			Rated Input		*Voltage Drop*
Ordering Number	Shunt	-		/	
Ordering Example	**Shunt**	**-**	**2000A**	**/**	**75mV**
			2000A		75mV