REV	ECN	REVISION RECORD	DATE	DR	CK
A	8806	REDRAW ALL VIEWS IN CAD	10/30/13	PF	MG

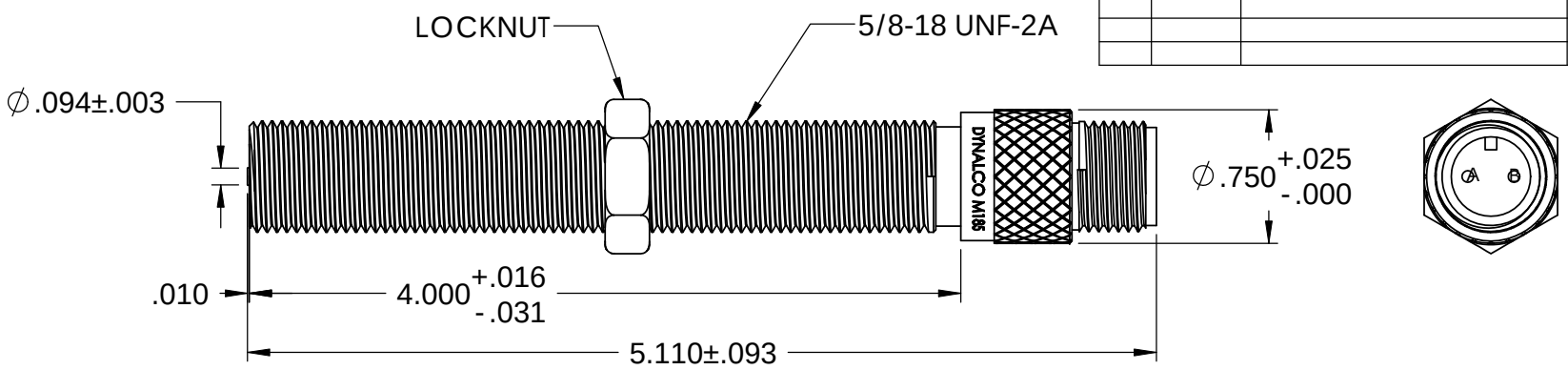

TEMPERATURE RANGE	OUTPUT VOLTAGE PEAK TO PEAK	DC RESISTANCE OHMS	INDUCTANCE MILLIHENRYS	OUTPUT CONNECTOR	INSULATION RESISTANCE	NET WEIGHT
-65 °F to +225 °F	400-550 VOLTS (SEE NOTE 1)	1750-2250 AT 75 °F	700 AT 1 KHz	MATES WITH MS3106A-10SL-4S (SEE NOTE 2)	100 MEGOHMS MIN. AT 500 VDC, COIL TO HOUSING	5.2 OZ. AVG.

NOTES:

1- TESTED AT 1000 INCHES/SECOND WITH A 20 PITCH, 30 TOOTH GEAR, 0.005" CLEARANCE AND 100 KOHMS LOAD SHUNTED BY 250 PF.
2- WITH APPROACH OF FERROUS METAL, PIN "B" IS POSITIVE WITH RESPECT TO PIN "A".

CONSTRUCTION:
HOUSING ---- 303 STAINLESS STEEL
POLE PIECE - 416 STAINLESS STEEL
POTTING ----- EPOXY RESIN

MOD-TRONIC

www.mod-tronic.com | sales@mod-tronic.com | 1-800-794-5883

DYNALCO

M185	DRAWN	DW
	APPROVED	LOC

MAGNETIC PICKUP, MODEL M185

SIZE	DWG. NO.	REV
A	800-0185	A