REV	ECN	REVISION RECORD	DATE	DR	CK
C	9595	UPDATE NOTES	05/18/15	PF	BR
D	11375	PULL UP RESISTOR WAS 2KΩ	06/06/19	SS	PV

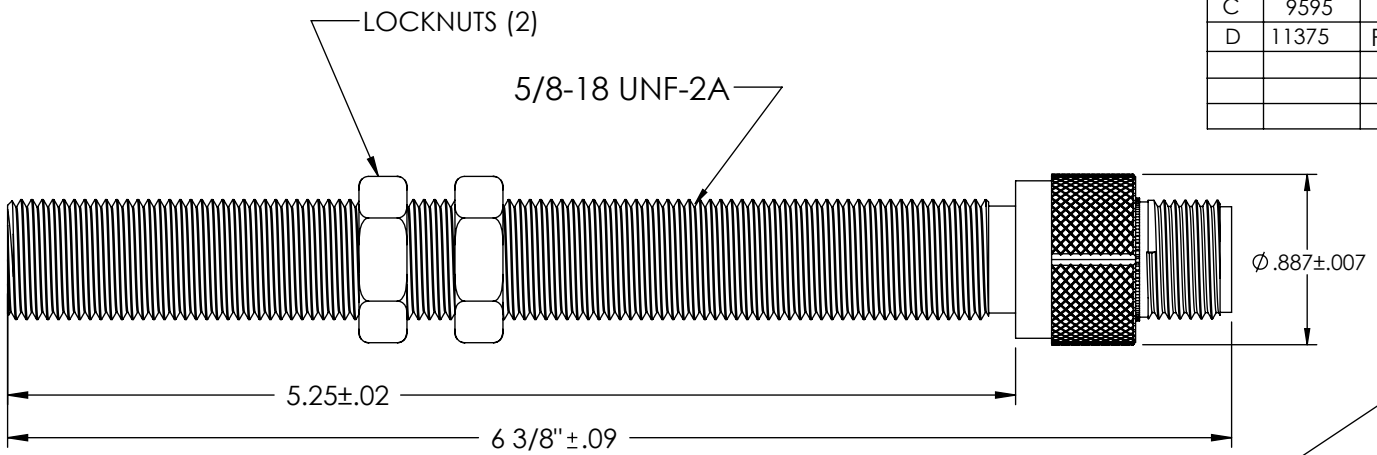

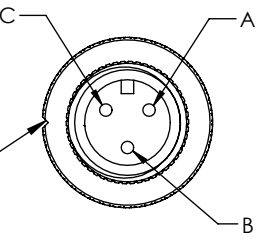

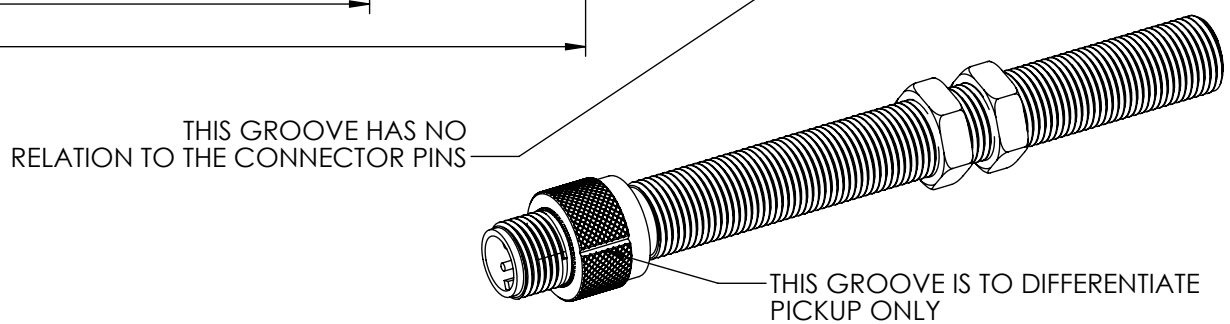

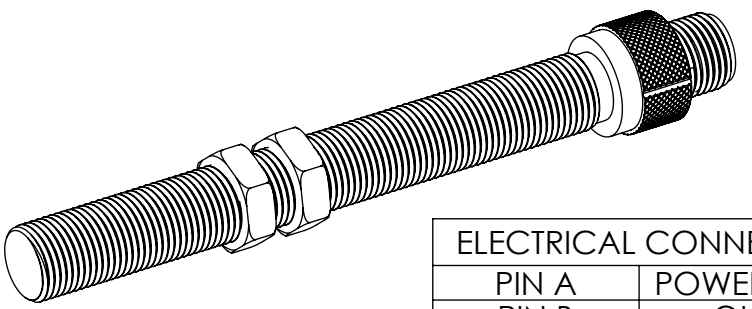

SPECIFICATIONS:

- POWER SUPPLY: 10 TO 32VDC.
- SUPPLY CURRENT: 30 mA MAXIMUM
- OPERATING TEMPERATURE: -30° F TO +250° F (-35°C to 125°C)
- SENSED FREQUENCY: 0 TO 20 KHZ
- OUTPUT VOLTAGE: SQUARE WAVE FANOUT TO 10 TTL INPUTS
  50±15% DUTY CYCLE.
  - LOGIC 0: +0.4 VDC MAX AT 15mA MAX.
  - LOGIC 1: +4.0 TO 5.5 VDC WITH 100KΩ PULL UP RESISTOR.
- INSULATION RESISTANCE: 100 MΩ MIN. AT 50 VDC (COMMON TO HOUSING)
- HOUSING: 303 STAINLESS STEEL, BLIND END.
- MAXIMUM OPERATING AIR GAP: .120".

ELECTRICAL CONNECTIONS	
PIN A	POWER SUPPLY
PIN B	OUTPUT
PIN C	COMMON

UNLESS OTHERWISE SPECIFIED

DIMENSIONS ARE IN INCHES
DIMENSIONAL TOLERANCES:
FRACTIONAL ±1/64
ANGULAR: ± 1/2°
XX ±0.010
XXX ±0.005

THIRD ANGLE PROJECTION

DYNALCO®

MODEL: M919-3		DRAWN	PF
DATE: 10/29/13	PATH: N\PROD\PICKUPS\M919-3	APPROVED	BR
MATERIAL:	TITLE: **PICKUP, ZERO VELOCITY**		
FINISH:	SIZE **A** / DWG. NO. **800-0919-3**		REV **D**
DO NOT SCALE DRAWING	SCALE 1:1	WEIGHT	SHEET 1 OF 1

THIS DOCUMENT, ALL INFORMATION CONTAINED IN AND ALL INFORMATION RELATED TO, IS PROPERTY OF DYNALCO, IS CONFIDENTIAL TO IT AND NO PART THEREOF NOR ANY SUCH INFORMATION MAY BE COPIED, DISSEMINATED OR USED IN ANY MANNER WHATSOEVER WITHOUT THE PRIOR WRITTEN CONSENT OF DYNALCO AND IS TO BE RETURNED TO DYNALCO UPON REQUEST.

Copyright © 2013-2019, Barksdale Inc., All Rights Reserved