PRODUCT CONFIGURATOR	
M919-4	**-L2.5**
⇩	⇩
BASE NUMBER	**DIM "A"** THREAD LENGTH
M919-4 Hall-Effect (≥0 RPM) Senses Ferrous Material 12-28VDC Input Power SEE NOTE#1	**-L2.5:** 2.5[63.5] **-L4.5:** 4.5[114.3] **-L5.25:** 5.25[133.3] **-Lxx**: Custom length (consult factory)

REV	ECN	REVISION RECORD	DATE	DR	CK
A	11542	INITIAL RELEASE	10/17/19	SS	PV

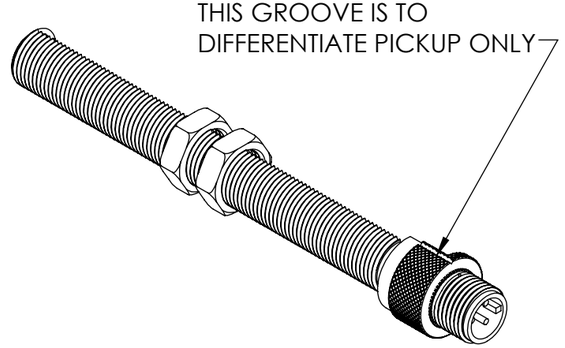

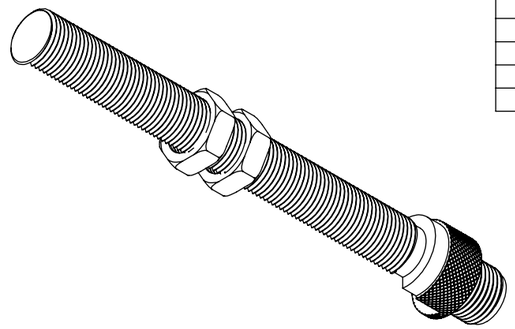

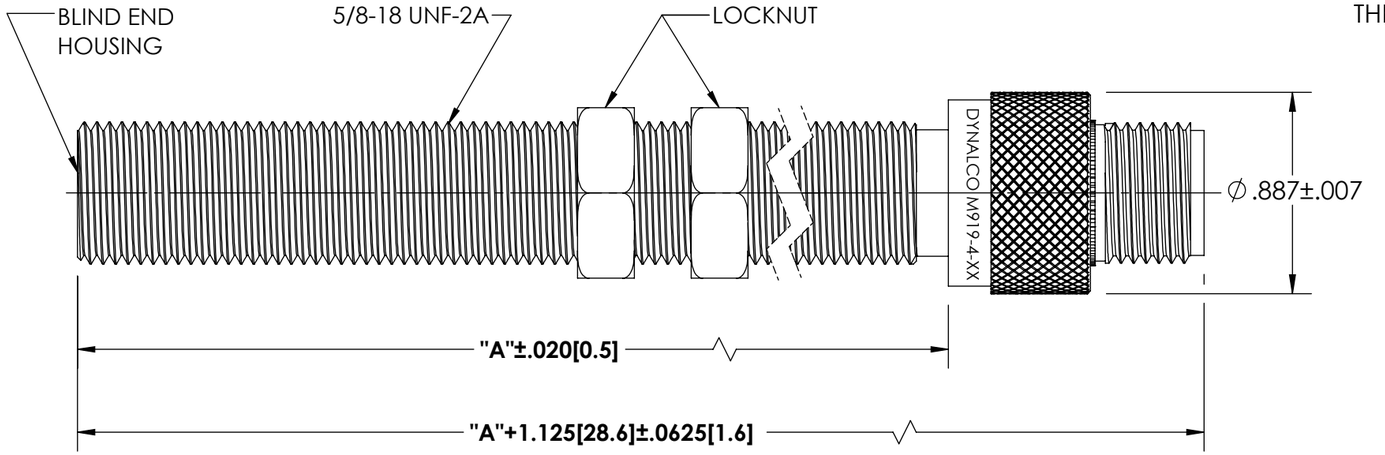

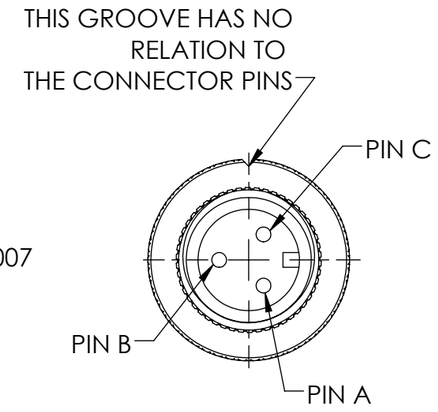

ELECTRICAL CONNECTIONS	
PIN A (RED)	POWER SUPPLY
PIN B (WHITE)	OUTPUT
PIN C (BLACK)	COMMON

NOTES:

1. POWER SUPPLY: 12 TO 28 VDC
2. SUPPLY CURRENT: 40 mA MAXIMUM
3. OPERATING TEMPERATURE: -30° F TO +230° F (-35°C to 110°C)
4. SENSED FREQUENCY: 0 TO 20 KHZ
5. OUTPUT CURRENT: 50±15% DUTY CYCLE WITH A 138 OHMS LOAD.
   - LOGIC 0: < 0.05 mA.
   - LOGIC 1: > 19.5 mA.
6. INSULATION RESISTANCE: 100 MΩ MIN. AT 50 VDC (COMMON TO HOUSING)
7. HOUSING: 303 STAINLESS STEEL, BLIND END.
8. MAXIMUM OPERATING AIR GAP: 0.120".
9. DIMENSIONS ARE IN INCHES [MM].

UNLESS OTHERWISE SPECIFIED
DIMENSIONS ARE IN INCHES
DIMENSIONAL TOLERANCES:
FRACTIONAL ±1/64
ANGULAR: ± 1/2°
XX ±0.010
XXX ±0.005

THIRD ANGLE PROJECTION

DYNALCO®

DATE: 10/17/2019
MATERIAL: -
FINISH:
DO NOT SCALE DRAWING

MODEL: M919-4 | DRAWN SS
PATH: N\PROD\PICKUPS\M919 | APPROVED PV
TITLE: **PICKUP, ZERO VELOCITY**
SIZE **B** | DWG. NO. **800-0919-4** | REV **A**
SCALE 1:2 | WEIGHT | SHEET 1 OF 1

THIS DOCUMENT, ALL INFORMATION CONTAINED IN AND ALL INFORMATION RELATED TO, IS PROPERTY OF DYNALCO, IS CONFIDENTIAL TO IT AND NO PART THEREOF NOR ANY SUCH INFORMATION MAY BE COPIED, DISSEMINATED OR USED IN ANY MANNER WHATSOEVER WITHOUT THE PRIOR WRITTEN CONSENT OF DYNALCO AND IS TO BE RETURNED TO DYNALCO UPON REQUEST.

Copyright © 2019, Barksdale Inc., All Rights Reserved