The Little General

MSPS Series

Features

- Compact size
- Easy setpoint adjustment
- High reliability

Applications

- Pool & spa heaters
- Beverage dispensers
- Medical gas delivery systems
- General industrial applications

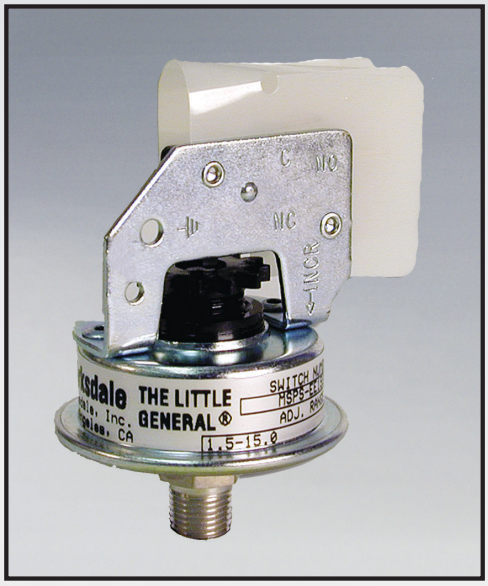

General Specifications*

Electrical Characteristics:	All models incorporate Underwriters' Laboratories, Inc. listed single pole double throw or single pole single throw snap-action switching elements.
Accuracy:	+/- 2.0% of the adjustable range
Switch:	See table below
Wetted Parts: Process Fitting: Seals & Diaphragms: Enclosure:	 304 stainless steel (standard) Buna-N (standard) Anodized aluminum base plate; Polysulfone housing
Electrical Connection:	.250" wide x .032" thick quick connect terminals
Enclosure Ratings:	Stripped models: NEMA 1
Pressure Connection:	1/8" NPT male (standard)

* See product configurator for additional options.

Approvals: UL: CSA: PED (European):	 MSPS models shown are UL recognized components under industrial control equipment, motor controllers, float and pressure operated (NKPZ2) files E42816. MSPS models are CSA certified under Class 3231 02, File LR22355. Compliant to PED 97/23/EC
Temperature Range: Operating:	 +20° to +165°F (-7° to +74°C)
Adjustment Instructions:	Turn adjustment nut clockwise to increase and counterclock wise to decrease the set point.
Options:	-FDA approved diaphragm -Oxygen cleaning -Factory preset -NSF approved switch
Shipping Weight: Housed Versions: Stripped Versions:	 0.5 lb. approximate 0.25 lb. approximate

Electrical Rating

Limit Switch Class	Voltage (Volts)	Maximum Continuous Current (Amps)
		Inductive
EE, FF	125/250 VAC	3
MM	125/250 VAC	25
JJ	125/250 VAC	15
JJ	125 VDC	0.5
	250 VDC	0.25

Wiring Diagram

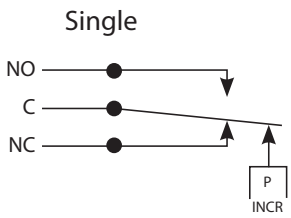

Technical Drawing

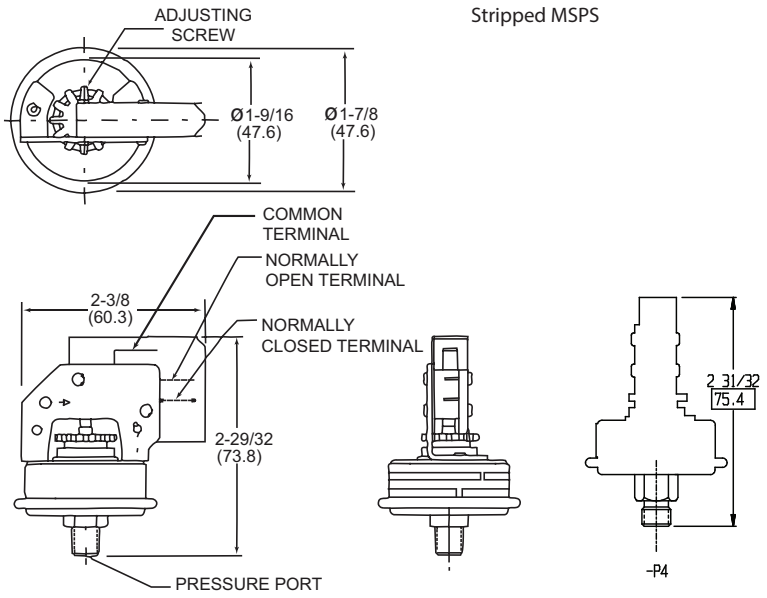

Dimensions in inches (mm)

Product Configurator

Example	MSPS	-EE	15	SS		

* Highlighted options represent those most frequently used. Select these common options for improved availability. (5/21)

Enclosure

MSPS	Stripped version

Limit Switch

-EE	SPST normally open; 3 amps @ 125/250 VAC
-FF	SPDT; 3 amps @ 125/250 VAC
-JJ	SPDT; 15 amps @ 125/250 VAC; 0.5 amps @ 125 VDC; 0.25 amps @ 250 VDC
-MM	SPST normally open; 25 amps @ 125/250 VAC

Consult Sales Drawing for alternative limit switches.

Pressure Connection

SS	Stainless steel, 1/8" NPT male
PLS[4]	Plastic, 1/8" NPT male
P4	Brass, 7/16-24UNS-2A for 1/4" tube connection

Diaphragm Material

Blank	Buna-N (standard)
-E [1]	Ethylene propylene (EPR)
-F	FDA approved Buna-N (No UL/CSA)
-V	Viton® diaphragm

Options

-Z1	Oxygen cleaned
-Sxxx	Factory preset (consult factory)
SF [3]	NSF 18 approved

Pressure Range

Limit	Pressure Range	Adjustable Range				Approx. Deadband (Acuation Value) psi (bar)	Proof Pressure psi (bar)
		Decreasing - psi (Bar)		Increasing - psi (Bar)			
		Min.	Max.	Min.	Max.		
EE	05	.5 (.03)	4.5 (.3)	1 (.07)	5 (.3)	.2-.5 (.01-.03)	100 (6.7)
	15	1.5 (.1)	14.2 (.9)	2.3 (.2)	15 (1)	.3-.8 (.02-.05)	100 (6.7)
	100	10 (.6)	92.1 (6.1)	17.9 (1.2)	100 (6.7)	2-7.9 (.1-.5)	150[2] (10)
FF	05	.5 (0.3)	4.5 (.3)	1 (.07)	5 (.3)	.2 - .8 (.01 - .05)	100 (6.7)
	15	1.5(.1)	14.2(.9)	2.3(.2)	15(1)	.3 - 2 (.02 -. 13)	100(6.7)
	100	10(.6)	92.1(6.1)	17.9(1.2)	100(6.7)	2 - 12 (.13 - .82)	150[2] (10)
JJ	05	.5 (.03)	4.3 (.3)	1.2 (.08)	5 (.3)	.2-.7 (.01-.05)	100 (6.7)
	15	1.5 (.1)	14 (.9)	2.5 (.2)	15 (1)	.3-1 (.02-.07)	100 (6.7)
	100	10 (.6)	91 (6)	19 (1.3)	100 (6.7)	2.6-9 (.2-.6)	150[2] (10)
MM	05	.5 (.03)	4.2 (.3)	1.3 (.09)	5 (.3)	.2-.8 (.01-.06)	100 (6.7)
	15	1.5 (.1)	13.8 (1)	2.7 (.2)	15 (1)	.3-1.2 (.02-.08)	100 (6.7)
	100	10 (.6)	89.5 (6.2)	20.5 (1.4)	100 (6.7)	2.8-10.5 (.2-.7)	150[2] (10)

NOTES:
[1] Only available with 05 and 15 pressure ranges.
[2] MSPS - 100 range models are 100 psi proof.
[3] SF option - automatically selects FDA approved diaphragm, O-Ring, and 300 Series SS pressure port.
[4] Only available with 05 pressure range.