

RIK mA
4-20mA/0-20mA Rogowski Coil Integrator
Users Manual

ACCUENERGY

Copyright © 2024 V: 1.0.3

This manual may not be altered or reproduced in whole or in part by any means without the expressed written consent of Accuenergy.

The information contained in this document is believed to be accurate at the time of publication, however, Accuenergy assumes no responsibility for any errors which may appear here and reserves the right to make changes without notice. Please ask the local representative for latest product specifications before ordering.

SAFETY INFORMATION

Please read this manual carefully before installation, operation and maintenance of the Rogowski Coil Integrator.

The following symbols in this manual are used to provide warning of danger or risk during the installation and operation of the unit.



Electric Shock Symbol: Carries information about procedures which must be followed to reduce the risk of electric shock and danger to personal health.



Safety Alert Symbol: Carries information about circumstances which if not considered may result in injury or death.



This mark indicates that this product is UL listed.

Installation and maintenance of the Rogowski Coil Integrator should only be performed by qualified, competent professionals who have received training and should have experience with high voltage and current devices.

Accuenergy shall not be responsible or liable for any damages caused by improper meter installation and/or operation.

	Product is protected by reinforced insulation
	Application Around and removal from UNINSULATED HAZARDOUS LIVE conductors is permited

WARNING: Disconnect power supply before making electrical connections.

WARNING: Current Transformers (CT's) should be installed by trained electrician or technician.

WARNING: The secondary circuit of a CT should not be opened when current is flowing through the primary circuit.

Table of Contents

Chapter 1: Overview 4

1.1 Overview 4
1.2 What's Included 4

Chapter 2: Overview 7

2.1 Hardware Overview 7
2.2 Installation 10
2.3 Configuration 13
2.4 Measurements 14

Appendix: Key Specifications 15

SPECIFICATIONS 15

RIK mA

4-20mA/0-20mA Rogowski Coil Integrator

Chapter 1

1.1 Overview

1.2 What's Included



Chapter 1: Overview

1.1 Overview

The Rogowski Integrator (RIK mA) is designed to provide users with an easy to install, plug and play, retrofit solution that can be used with any power meter or equipment with either 4-20mA and 0-20mA current input from a Current Transformer(CT). The flexibility of the Rogowski Coil CT's reduces the complexity and allows it use to be used for a variety of applications and configurations where special constraints may limit the use of other CT solutions. The RIK is a configurable unit that can measure current from 2.5-60000A making it ideal for any system that operates at both 50Hz and 60Hz further adding to its flexibility.

1.2 What's Included

The Rogowski Coil includes either the single channel or three channel integrator unit which contains the seven configurable CT ratios for each channel. The integrator unit can be surfaced mounted or mounted on a standard DIN rail.

Rogowski coils that will measure the current and the 24Vdc power supply to power the integrator are sold separately.

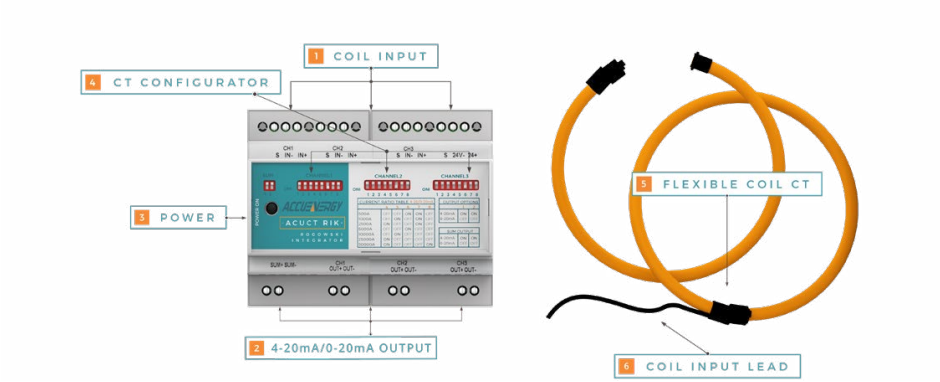

Three Phase Integrator

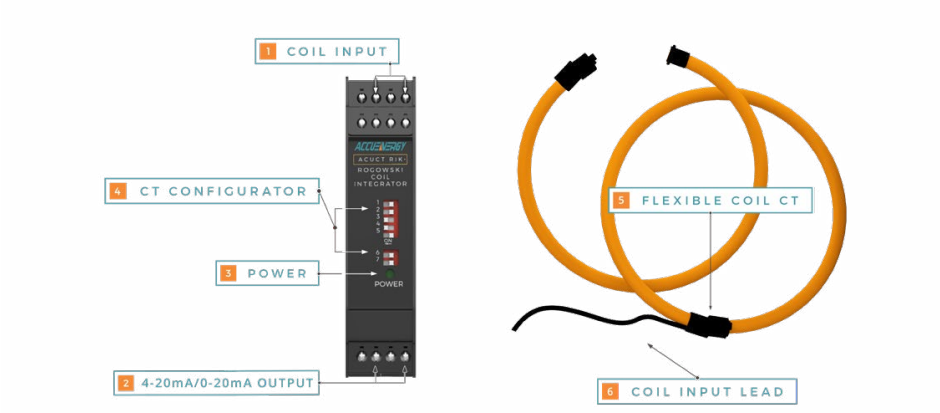

Single Phase Integrator

Details:

1 **Rogowski Coil Input**
Three Channels for flexible rope style CT input.

2 **4-20mA/0-20mA Output**
Three Channels, 4-20mA/0-20mA Output.

3 **Power On Light**
Indicates that the RIK is powered up.

4 **CT Configurator**
Seven individual field configurable CT ratios for each channel

5 **Rogowski Coil**
CT sizes available from 16-47 inches

6 **Coil Input Lead**
Input lead for connection with RIK integrator.

RIK mA

4-20mA/0-20mA
Rogowski Coil Integrator

Chapter 2

2.1 Hardware Overview

2.2 Installation

2.3 Configuration

2.4 Measurements



Chapter 2: Overview

The installation method is introduced in this chapter. Please read this chapter carefully before beginning installation.

2.1 Hardware Overview

The RIK mA is composed of the integrator and the optional power supply which can all be mounted on a DIN rail along with one or three Rogowski coils. Rogowski coil and power supply sold separately.

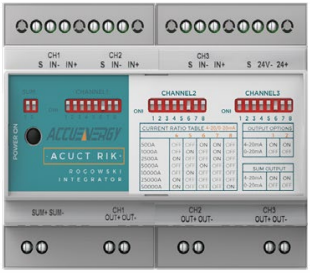



Three Phase Integrator





Single Phase Integrator

Dimensions:

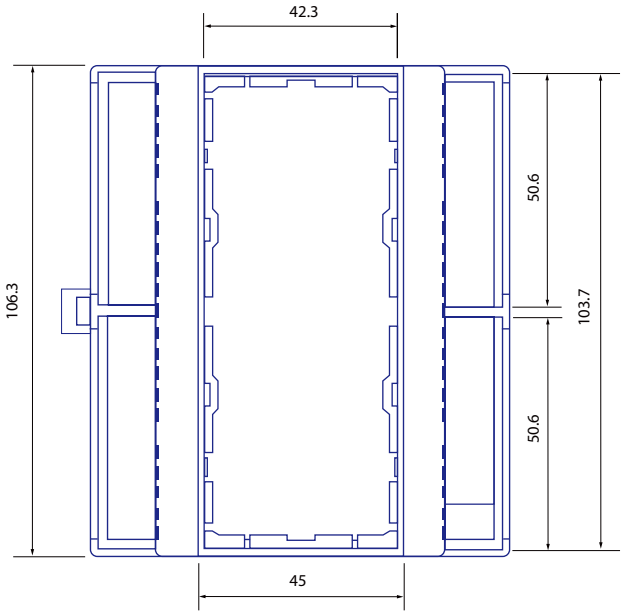

Figure 1: Top View

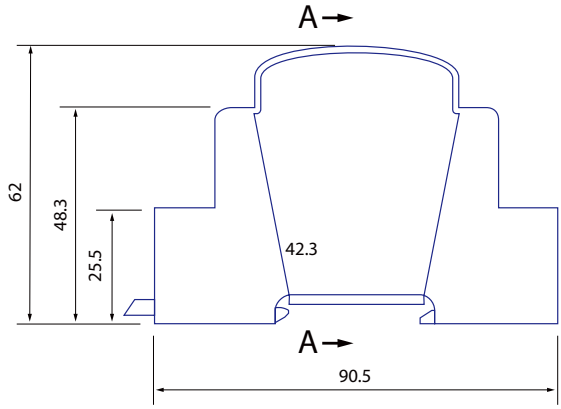

Figure 2: Side View

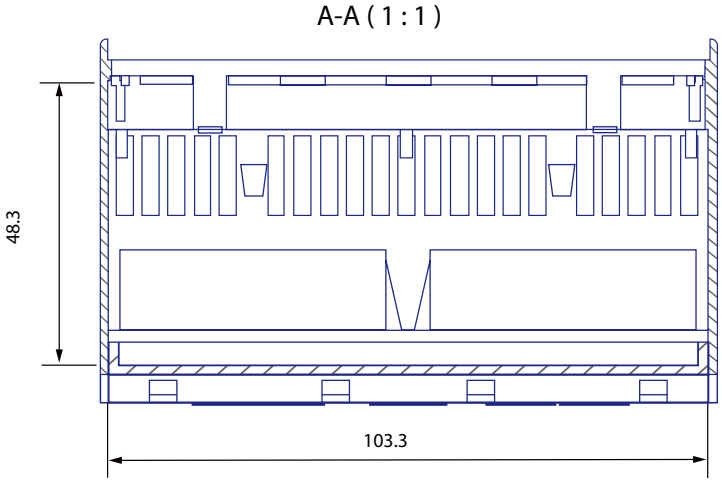

Figure 3: Front view

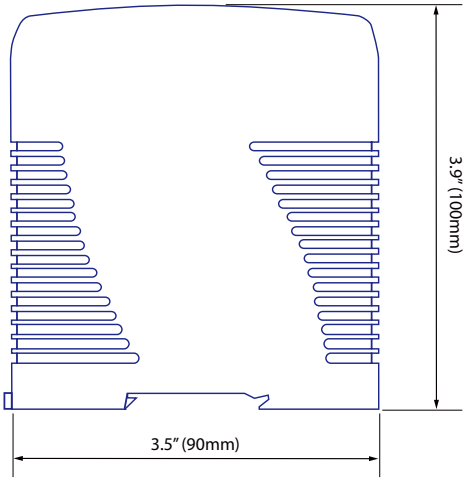

Figure 4: Side view of Power Supply unit

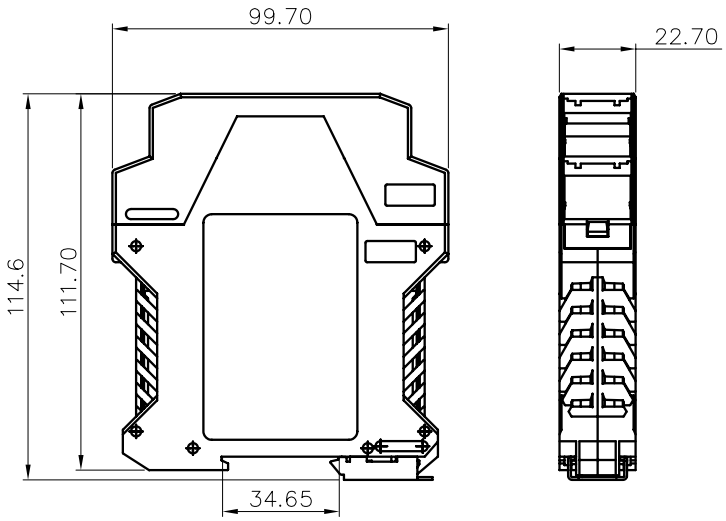

Figure 5: Single Integrator

2.2 Installation

The installation of the RIK mA integrator requires the user to simply connect the Rogowski coil CT (sold separately) to the integrator and wire the 4-20/0-20mA output to the power meter or electrical equipment which will receive the signal. If the system is single phase or there are two phases only the phases that need the CT will need to be connected to the input of the integrator.

The diagram below illustrates how to connect the integrator.

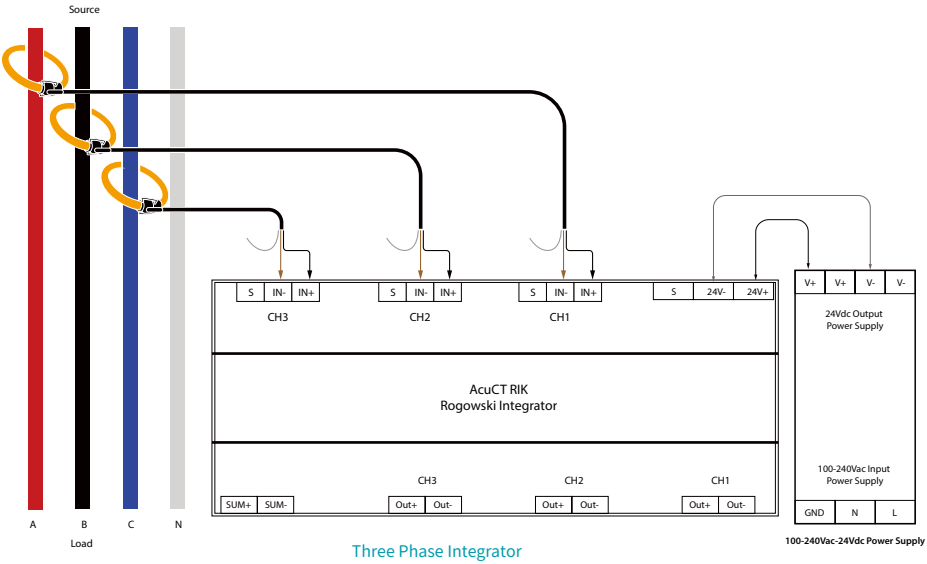

Three Phase Integrator

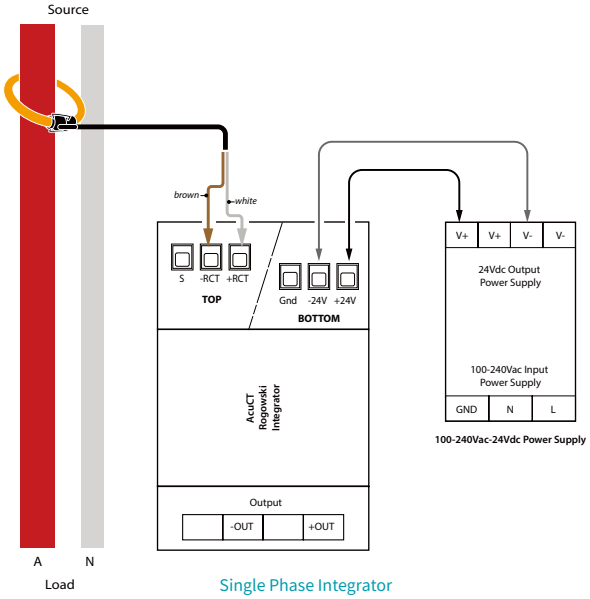

Single Phase Integrator

Input:

The provided Rogowski coils are the input to the integrator. Connect the Rogowski coil leads to the input channel on the integrator. The white leads of the CT are the positive wire and the brown lead is the negative wire.

- Connect the white lead to 'IN+' or 'RCT+' and the brown lead to 'IN-' or 'RCT-'. The Shield of the Rogowski coil should be left floating. Open the coil by pulling apart the black connector of the CT.
- Open the coil by pulling apart the black connector of the CT.
- Install the CT around the conductor to be measured. Arrow on the Rogowski coil connector should be point to load.
- Re-attach the coil together.
- Repeat above steps if using more than one CT.

Ensure that the CT connected to each channel of the integrator is around the correct phase/line voltage.

Output:

Connect each output channel to the meter or equipment with 0-20mA/4-20mA input.

- 'OUT+' is to be connected to the positive input terminal of meter.
- 'OUT-' is to be connected to the negative input terminal of meter.

Power Supply: (Sold Separately)

The RIK mV requires 24Vdc power to operate. There is a 100-240Vac (50/60Hz) power adapter that is included to provide this power.

- Connect the input power supply that is between 100-240Vac to the 'L' and 'N' terminals of the power supply.
- Connect the DC output of power supply to the RIK's '24V+' and '24V-' terminals.

2.3 Configuration

One or three sets of dip switches are used to configure corresponding current ranges with output ratings.

When the dip switch is in the up position the dip switch is considered to be Off. When the dip switch is in the down position the dip switch is considered as On.

Configure each channels dip switches to output the desired range. Dip Switches 1 and 2 will determine the output signal of that channel.

Note: *Dip Switch #3 is not used.*

For example to measure current rated for 1000A with a 4-20mA output signal the dip switches 1 and 2 will be configured in the 'ON' position whiles dip switches 4 through 8 for the three channels must be configured to be 'OFF', 'ON', 'OFF', 'ON' and 'OFF' respectively.

- Enter this current ratio into the meter or equipment so it can read accurately from the integrator.

Table 1: Three Phase Integrator Current Ratio Table

Output	1	2
4-20mA	ON	ON
0-20mA	OFF	OFF

	4	5	6	7	8
500A	OFF	OFF	ON	ON	OFF
1000A	OFF	ON	OFF	ON	OFF
2500A	ON	OFF	OFF	ON	OFF
5000A	OFF	OFF	ON	OFF	OFF
10000A	OFF	ON	OFF	OFF	OFF
25000A	ON	OFF	OFF	OFF	OFF
50000A	ON	OFF	OFF	OFF	ON

Table 2 - Three Phase Integrator Sum Output Configuration

Output	1	2
4-20mA	ON	ON
0-20mA	OFF	OFF

Table 3 - Single Phase Integrator Current Ratio Table

	1	2	3	4	5
500A	OFF	OFF	ON	ON	OFF
1000A	OFF	ON	OFF	ON	OFF
2500A	ON	OFF	OFF	ON	OFF
5000A	OFF	OFF	ON	OFF	OFF
10000A	OFF	ON	OFF	OFF	OFF
25000A	ON	OFF	OFF	OFF	OFF
50000A	ON	OFF	OFF	OFF	ON
Output Options					
	6	7			
4-20mA	ON	ON			
0-20mA	OFF	OFF			

2.4 Measurements

For each current range the integrator will be able to measure the current from 0.5% up to 120% of the rated current. That is when the integrator is configured to measure a current rated for 1000A it will measure the current from 5A to 1200A. The integrator will output 20mA at the rated current of 1000A and will output its maximum of 24mA at 1200A.

The table below provides all the ranges of current that can be measured for each range.

Current Range Setting		
Primary INput (A_{RMS})	Sensing Range (A)	Output
500	2.5 to 600	4-20mA or 0-20mA @500A
1000	5 to 1200	4-20mA or 0-20mA @1000A
2500	12.5 to 3000	4-20mA or 0-20mA @2500A
5000	25 to 6000	4-20mA or 0-20mA @5000A
10000	50 to 12000	4-20mA or 0-20mA @10000A
25000	125 to 30000	4-20mA or 0-20mA @25000A
50000	250 to 60000	4-20mA or 0-20mA @50000A

Appendix: Key Specifications

SPECIFICATIONS

Specifications	Measurements
Current Measurement Range	2.5A - 60000A
Output Current	4-20mAdc or 0-20mAdc (Field Configurable)
Sensing Range	500A, 1000A, 2500A, 5000A, 10000A, 25000A and 50000A (Field Configurable)
Measurement Channels	1 or 3 Channel
Frequency	45Hz to 65Hz
Accuracy	+1% Full Scale Error
Channel Cross Talk	<-60dB
Maximum Operating Temparature	55°C (131°F)

ACCUENERGY

MAKE ENERGY USAGE SMARTER

Mod-Tronic Instruments Ltd.
1-800-794-5883
www.mod-tronic.com
sales@mod-tronic.com

Revision Date: Sep 2024 Document # 5060E2101